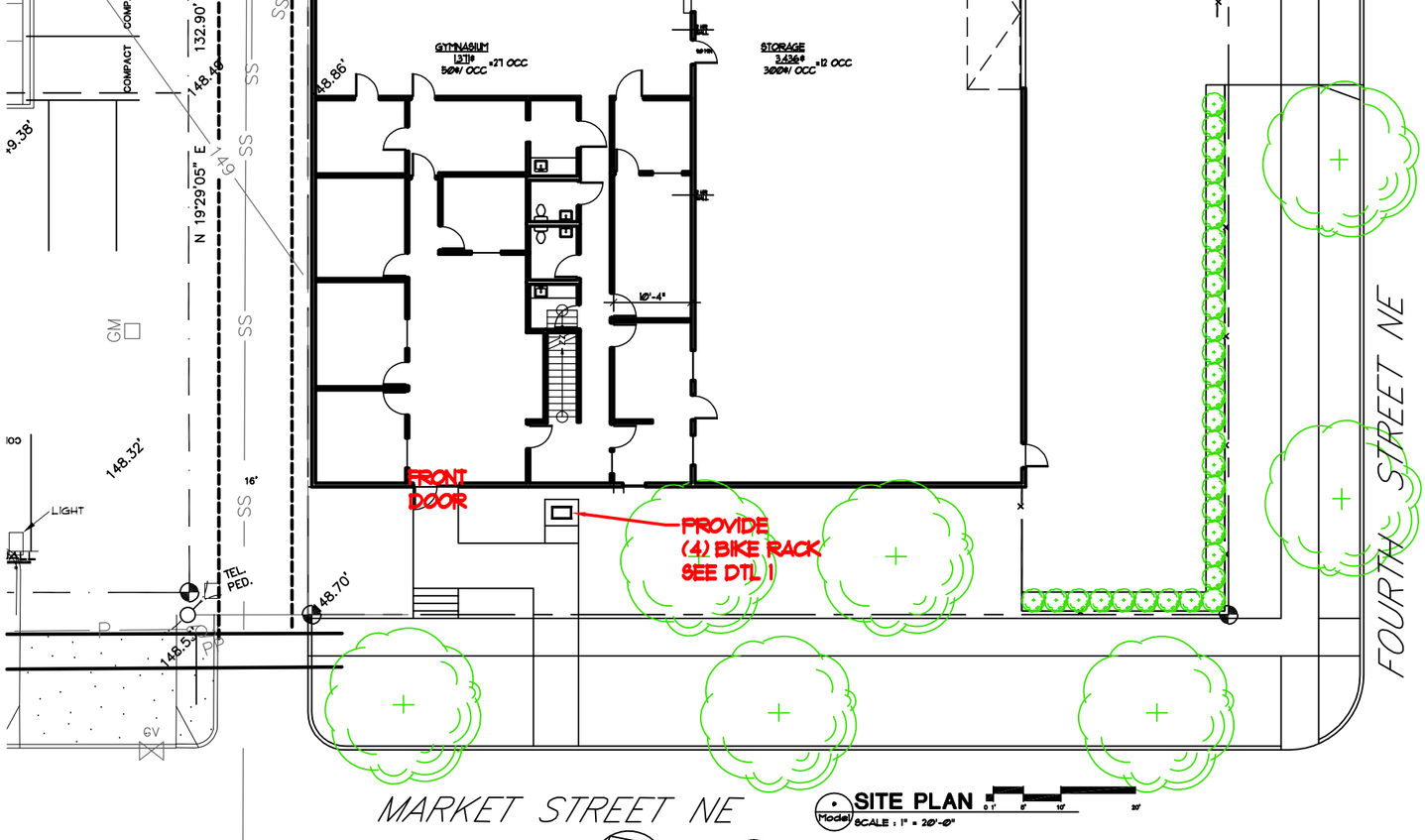

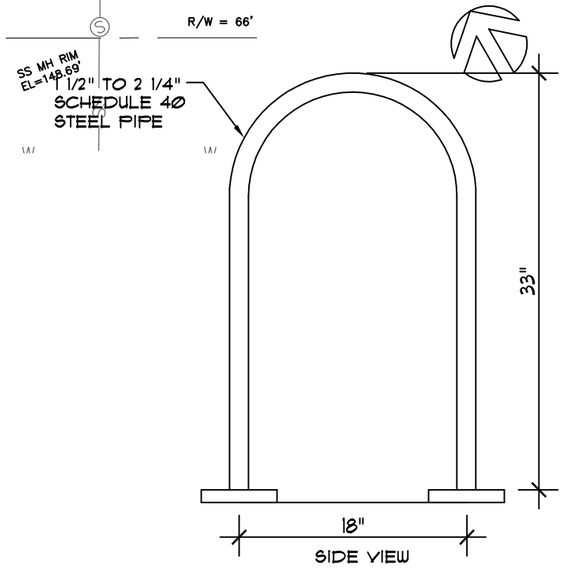

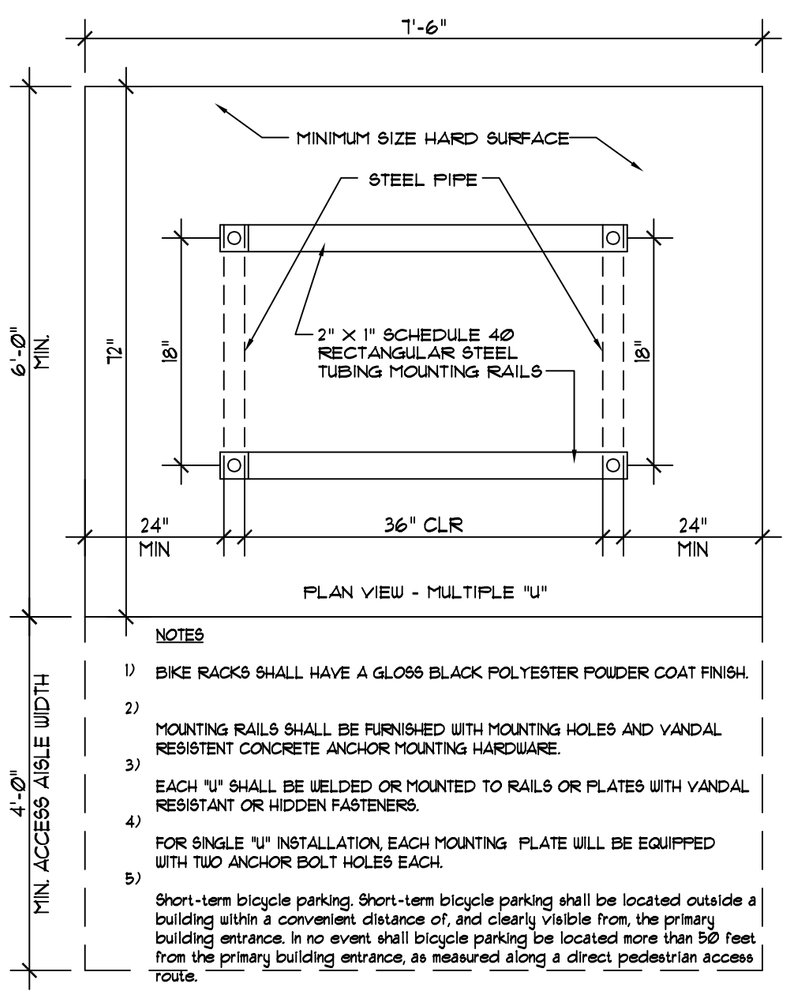

NOTES

1) BIKE RACKS SHALL HAVE A GLOSS BLACK POLYESTER POWDER COAT FINISH.

2) MOUNTING RAILS SHALL BE FURNISHED WITH MOUNTING HOLES AND VANDAL RESISTENT CONCRETE ANCHOR MOUNTING HARDWARE.

3) EACH "U" SHALL BE WELDED OR MOUNTED TO RAILS OR PLATES WITH VANDAL RESISTANT OR HIDDEN FASTENERS.

4) FOR SINGLE "U" INSTALLATION, EACH MOUNTING PLATE WILL BE EQUIPPED WITH TWO ANCHOR BOLT HOLES EACH.

5) Short-term bicycle parking. Short-term bicycle parking shall be located outside a building within a convenient distance of, and clearly visible from, the primary building entrance. In no event shall bicycle parking be located more than 50 feet from the primary building entrance, as measured along a direct pedestrian access route.

1

BICYCLE PARKING RACK DETAIL

PER TABLE 806-10

SCALE: 1"=1'-0"

M:/02SITEWK/600PIPNG/02600 BIKE RACK

REGISTERED ARCHITECT
RONALD JAMES PED
SALEM, OREGON
STATE OF OREGON

NEW DAYCARE FACILITIES FOR
FACES OF AMERICA
395 MARKET STREET NE

15 AUG 2023

22354