DRAWINGS FOR:

BLOSSOM APARTMENTS
3480 BLOSSOM DR NE
SALEM, OR 97305

FOR:

MR. CHRIS ANDERSON
CLUTCH INDUSTRIES
360 BELMONT ST NE
SALEM, OR 97301
503.932.3179
chrisa@clutchindustries.com

PROJECT LOCATION
TAX LOT #073W01A003301
SEC1, T7S, R3W., W.M.

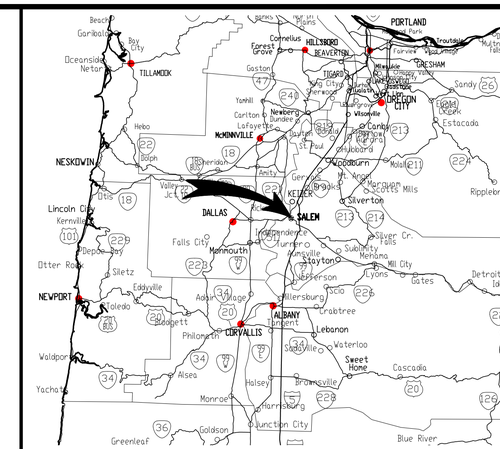

VICINITY MAP

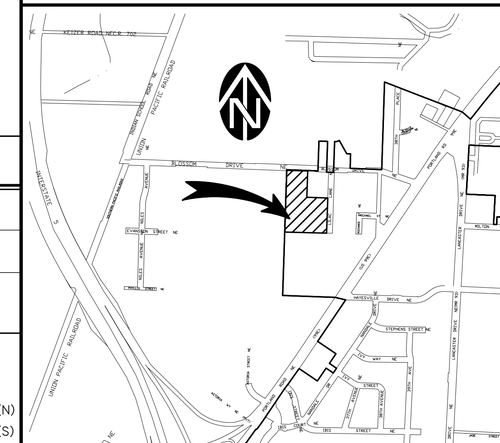

LOCATION MAP

811
Know what's below.
Call before you dig.

BENCHMARK UTILIZED:
CITY OF SALEM #6060

ELEV: 184.08' NGVD 29

ALUMINUM DISK SET S OF ADA RAMP AT TOP OF BEGIN DROP, 14' SW OF MH, 10' SE OF TRAFFIC SIGNAL POLE, 20' N OF GAS VALVE, 32' E OF FHYD, SW CORNER OF INTERSECTION OF HAYESVILLE & PORTLAND

SHEET INDEX

ABBREVIATIONS

ASPH	ASPHALT	IRR	IRRIGATION
AD	AREA DRAIN	IE	INVERT ELEVATION
ASSY	ASSEMBLY	JB	JUNCTION BOX
BLDG, BLD	BUILDING	LP	LIGHT POLE
BW	BOTTOM OF WALL	M	METER, MAIN
CATV	CABLE TELEVISION	MB	MAILBOX
CB	CATCH BASIN	MH	MANHOLE
CO	CLEAN-OUT	OH	OVER-HEAD
CONC	CONCRETE	P/L, ℙ	PROPERTY LINE
CL, ℄	CENTERLINE	PP	POWER POLE
DIP	DUCTILE IRON PIPE	PVC	POLYVINYL CHLORIDE
EG	EDGE OF GRAVEL	PWR	POWER
EOP, EP	EDGE OF PAVEMENT	R, RAD	RADIUS
ELEV	ELEVATION	ROW, R/W	RIGHT-OF-WAY
EX, EXIST	EXISTING	SS	SANITARY SEWER
FDC	FIRE DEPT. CONNECTOR	SD	STORM DRAIN
FT	FEET	SVC	SERVICE
FF	FINISH FLOOR	SWK, S/W	SIDEWALK
FG	FINISH GRADE	TC	TOP OF CURB
FH	FIRE HYDRANT	TEL	TELEPHONE
FI	FIELD INLET	TR	TRANSFORMER
FM	FORCE MAIN	TS	TRAFFIC SIGNAL
GRAV	GRAVEL	TW	TOP OF WALL
GM	GAS METER	TYP	TYPICAL
GP	GATE POST	UG, U/G	UNDER GROUND
GS	GROUND SHOT	UTL	UTILITY
GV	GAS VALVE	VLT	VAULT
HC	HANDICAP	W/	WITH
HDPE	HIGH-DENSITY POLYETHYLENE	WM	WATER METER
HYD	HYDRANT	WLM	WETLANDS MARKER
IR	IRON ROD	YPC	YELLOW PLASTIC CAP
IP	IRON PIPE		

SYMBOLS

AD	AREA DRAIN		SIGN POST
CB or	CATCH BASIN	PED	PEDESTAL
CO	CLEANOUT		MAIL BOX
	FIRE HYDRANT	IV	IRRIGATION VALVE
GV G	GAS VALVE		LIGHT POLE
WV W	WATER VALVE		UTILITY/POWER POLES
G P W	GAS/POWER/WATER METER	TP	TEST PIT
DS	DOWN SPOUT		MONUMENT FOUND
T	MANHOLE TELEPHONE		
D	MANHOLE STORM DRAIN		
S	MANHOLE SANITARY SEWER		

TREES – *TREENAME* DIAMETER (INCHES)/DRIP RADIUS (FEET)
NOTE: DIAMETER MEASURED AT BREAST HEIGHT

LINE TYPES

CATV LINE	CATV
COMMUNICATION LINE	COM
EASEMENT LINE	
FENCE LINE	
FIBER OPTIC LINE	FOC
GAS LINE	GAS
EDGE OF GRAVEL LINE	
OVERHEAD LINE	OH LINES
PHONE LINE	PH
POWER LINE	ELEC
SANITARY SEWER LINE	SS
STORM DRAIN LINE	SD
WATER LINE	W

ITEM	PROPOSED	EXISTING
SANITARY SEWER		SS
STORM DRAIN		SD
WATER		W
GAS		G
TELEPHONE		T
POWER		P
TELEVISION		TV
FENCE	X X	X X
RAILROAD		
CURB, DRIVEWAY, P.C.C. SIDEWALK		
HEDGE OR BRUSH		
TREES		
STREET OR ALLEY RIGHT OF WAY		R/W
PLATTED LOT LINE		
PLATTED LOT LINE (ABANDONED)		
OWNERSHIP LINE		
EASEMENT OR TEMPORARY RIGHT OF WAY		
IMPROVEMENT DISTRICT BOUNDARY		
PROJECT CENTERLINE AND STATIONING	2 3 4 5+00	
CITY LIMITS LINE		

BARRICADE		
FLOW DIRECTION		
TELEPHONE MANHOLE		T
TELEPHONE PEDESTAL		TEL
SANITARY SEWER MANHOLE	S	S
STORM DRAIN MANHOLE	D	D
CATCH BASIN		
JUNCTION BOX		
FIRE HYDRANT AND VALVE		
WATER METER		
WATER VALVE		
POWER POLE		
POWER POLE W/ANCHOR		
POLE W/LUMINARE		
LIGHT POLE		
SIGN POST		
MAILBOX		
TRAFFIC SIGNAL		T.S.
X-WALK SIGNAL		X-WK

NO.	DATE	DESCRIPTION
1		REVISIONS

VERIFY SCALE
BAR IS ONE INCH ON ORIGINAL DRAWING
0 1"
IF NOT ONE INCH, OR THIS SHEET, ADJUST SCALES ACCORDINGLY

DSGN. JW
DRN. AK
CKD. JW
DATE: 06/2022

REGISTERED PROFESSIONAL ENGINEER
WILLIAM J. WELLS
REVIEW
RENEWS: 6/30/2024

WESTECH ENGINEERING, INC.
CONSULTING ENGINEERS AND PLANNERS
3841 Fairview Industrial Dr. S.E., Suite 100, Salem, OR 97302
Phone: (503) 585-2474 Fax: (503) 585-3986
E-mail: westech@westech-eng.com

CLUTCH INDUSTRIES
BLOSSOM APARTMENTS
COVER, INDEX, & VICINITY MAPS

DRAWING
C0.0

JOB NUMBER
3366.0000.0

11/28/2022 6:48:24 AM
C:\Users\CAD\Desktop\Work (PC)\Projects\Clutch Industries\Blossom\Civil\Plots\C0.0 - Cover, Index & Vicinity Maps.dwg, (C0.0 tab)

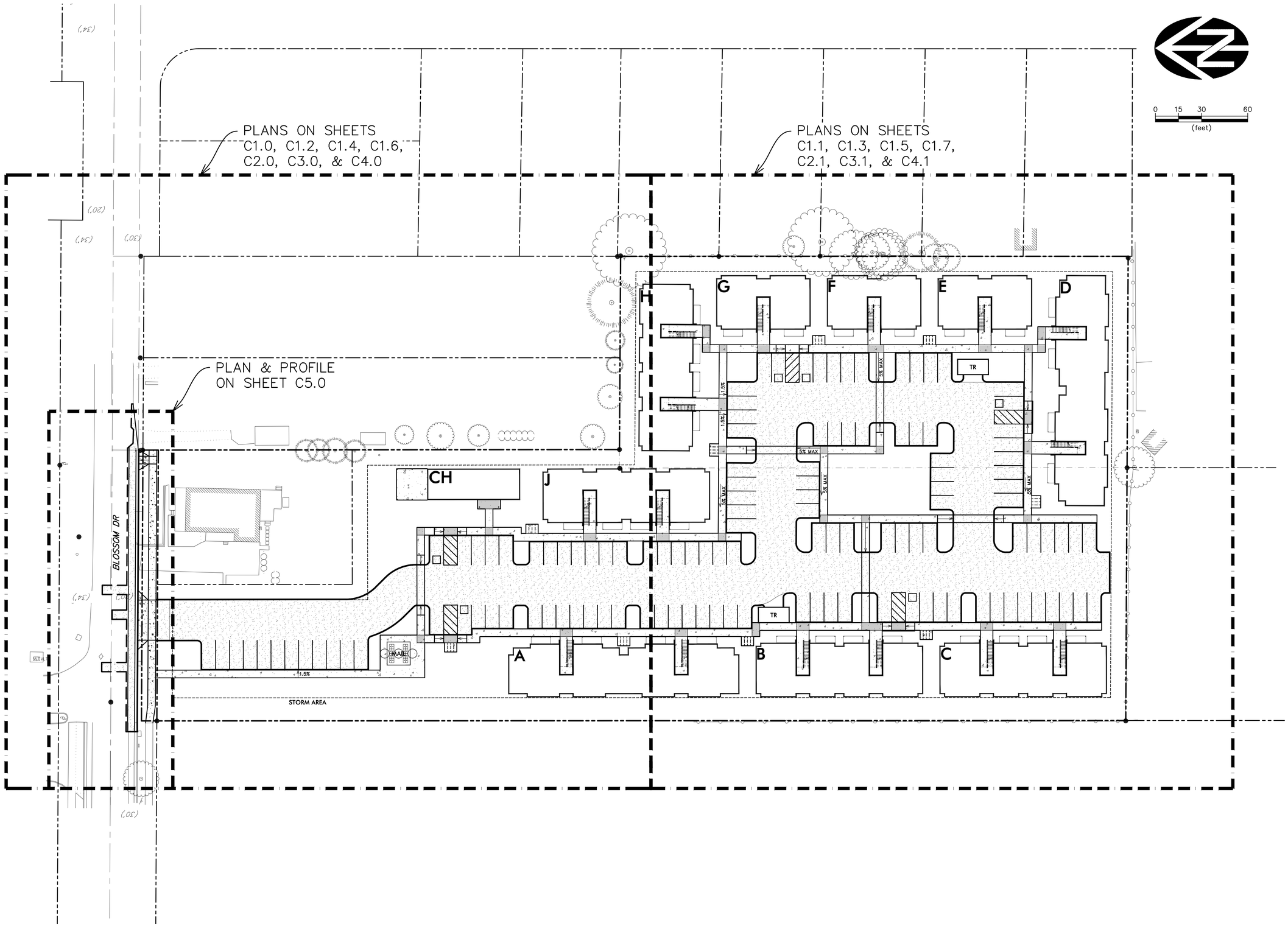

NO.	DATE	DESCRIPTION	BY
1			

REVISIONS

VERIFY SCALE
BAR IS ONE INCH ON ORIGINAL DRAWING
0 1"
IF NOT ONE INCH, ADJUST THIS SHEET, ADJUST SCALES ACCORDINGLY

DSN. JW
DRN. AK
CKD. JW
DATE: 07/2022

REVIEW

REGISTERED PROFESSIONAL ENGINEER
WILLIAM J. WELLS
OREGON

RENEWS: 6/30/2024

WESTECH ENGINEERING, INC.
CONSULTING ENGINEERS AND PLANNERS
3841 Fairview Industrial Dr. S.E., Suite 100, Salem, OR 97302
Phone: (503) 585-2474 Fax: (503) 585-3986
E-mail: westech@westech-eng.com

CLUTCH INDUSTRIES
BLOSSOM APARTMENTS

OVERALL SHEET KEY

DRAWING
C0.1

JOB NUMBER
3366.0000.0

11/28/2022 6:48:39 AM
C:\Users\CAD\Desktop\Work (PC)\Projects\Clutch Industries\Blossom\Civil\Plots\C0.1 - Overall Sheet Key.dwg, (C0.1 tab)

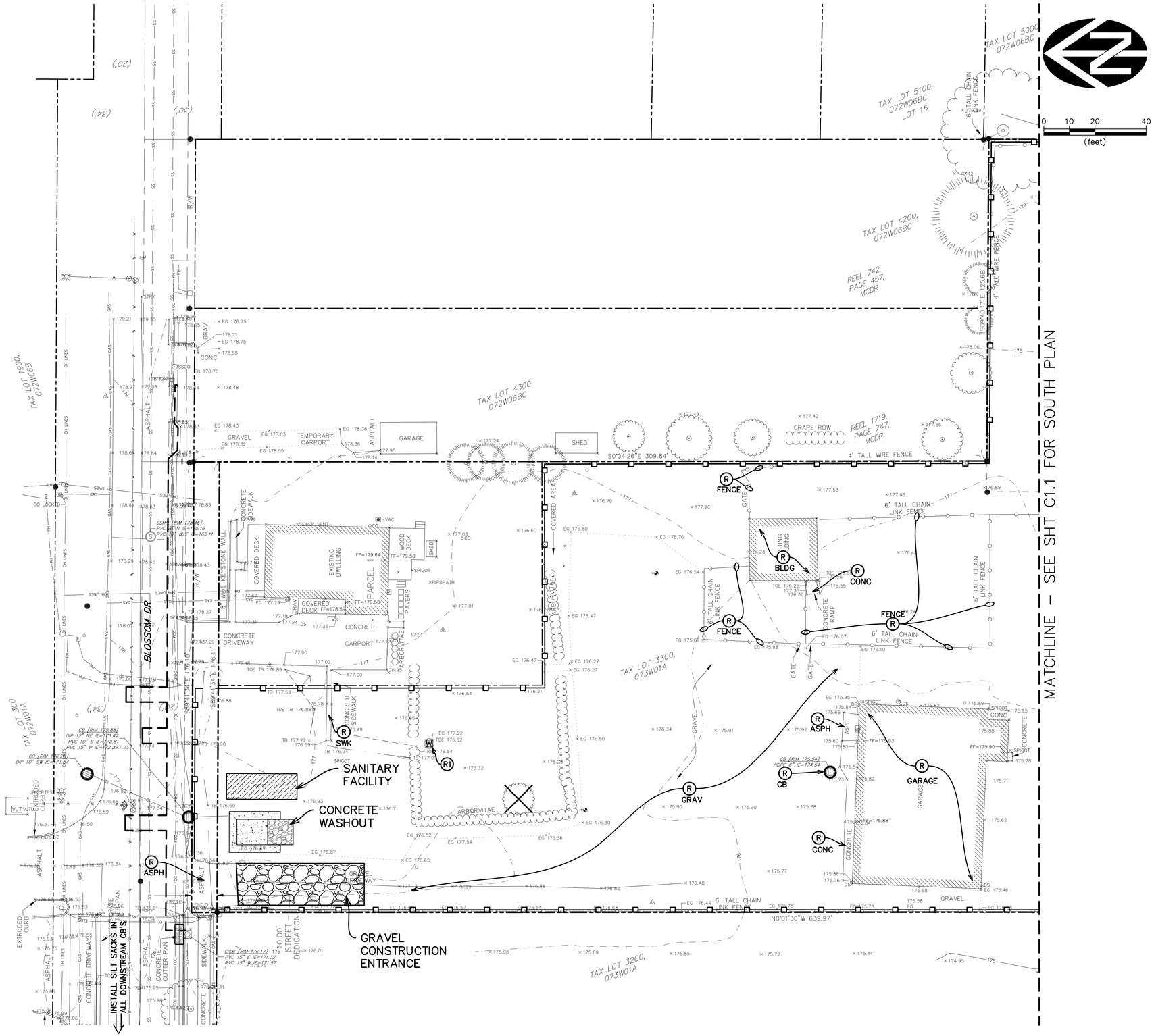

EROSION CONTROL LEGEND

- SILT SACK
- BIO-BAG
- SILT FENCE

DEMOLITION LEGEND

- (P) PROTECT
- (R) REMOVE
- (R1) COORDINATE W/ AN OREGON LICENSED WELL DRILLER TO ABANDON WELL & REMOVE CASING 4' BELOW GRADE PER OHD STD'S.
- (R2) COORDINATE W/ FRANCHISE UTILITY TO REMOVE
- REMOVE BUSH

0 10 20 40 (feet)

NO.	DATE	DESCRIPTION	BY
1		REVISIONS	

VERIFY SCALE
BAR IS ONE INCH ON ORIGINAL DRAWING
0 1"
IF NOT ONE INCH, OR THIS SHEET, ADJUST SCALES ACCORDINGLY

DSGN. JW
DRN. AK
CKD. JW
DATE: 06/2022

REGISTERED PROFESSIONAL ENGINEER
WILLIAM J. WELLS
REVIEW
RENEWS: 6/30/2024

WESTECH ENGINEERING, INC.
CONSULTING ENGINEERS AND PLANNERS
3841 Fairview Industrial Dr. S.E., Suite 100, Salem, OR 97302
Phone: (503) 585-2474 Fax: (503) 585-3986
E-mail: westech@westech-eng.com

CLUTCH INDUSTRIES
BLOSSOM APARTMENTS

EROSION CONTROL – DEMOLITION & CLEARING (N)

DRAWING
C1.0

JOB NUMBER
3366.0000.0

11/28/2022 6:48:53 AM
C:\Users\CAD\Desktop\Work (PC)\Projects\Clutch Industries\Blossom\Civil\Plots\C1.0 - Erosion Control - Demolition & Clearing.dwg, (C1.0 tab)

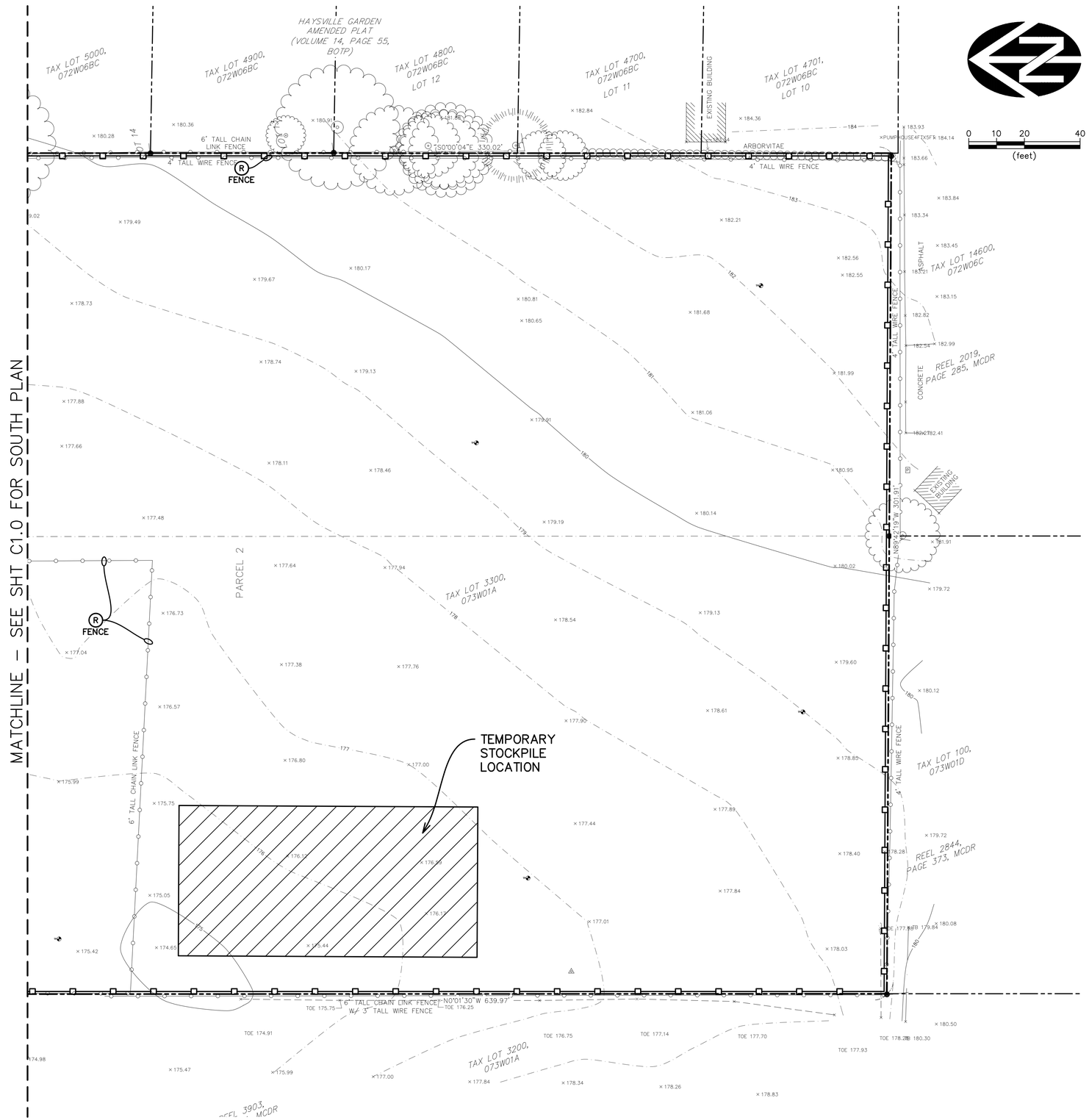

EROSION CONTROL LEGEND

- SILT SACK
- BIO-BAG
- SILT FENCE

DEMOLITION LEGEND

- (P) PROTECT
- (R) REMOVE
- (R1) COORDINATE W/ AN OREGON LICENSED WELL DRILLER TO ABANDON WELL & REMOVE CASING 4' BELOW GRADE.
- (R2) COORDINATE W/ FRANCHISE UTILITY TO REMOVE
- REMOVE BUSH

NO.	DATE	DESCRIPTION	BY
1		REVISIONS	

VERIFY SCALE
BAR IS ONE INCH ON ORIGINAL DRAWING
0 1"
IF NOT ONE INCH, OR THIS SHEET, ADJUST SCALES ACCORDINGLY

DSN. JW
DRN. AK
CKD. JW
DATE: 06/2022

REGISTERED PROFESSIONAL ENGINEER
OREGON
WILLIAM J. WELLS

REVIEW

RENEWS: 6/30/2024

WESTECH ENGINEERING, INC.
CONSULTING ENGINEERS AND PLANNERS
3841 Fairview Industrial Dr. S.E., Suite 100, Salem, OR 97302
Phone: (503) 585-2474 Fax: (503) 585-3986
E-mail: westech@westech-eng.com

CLUTCH INDUSTRIES
BLOSSOM APARTMENTS

EROSION CONTROL – DEMOLITION & CLEARING (S)

DRAWING
C1.1

JOB NUMBER
3366.0000.0

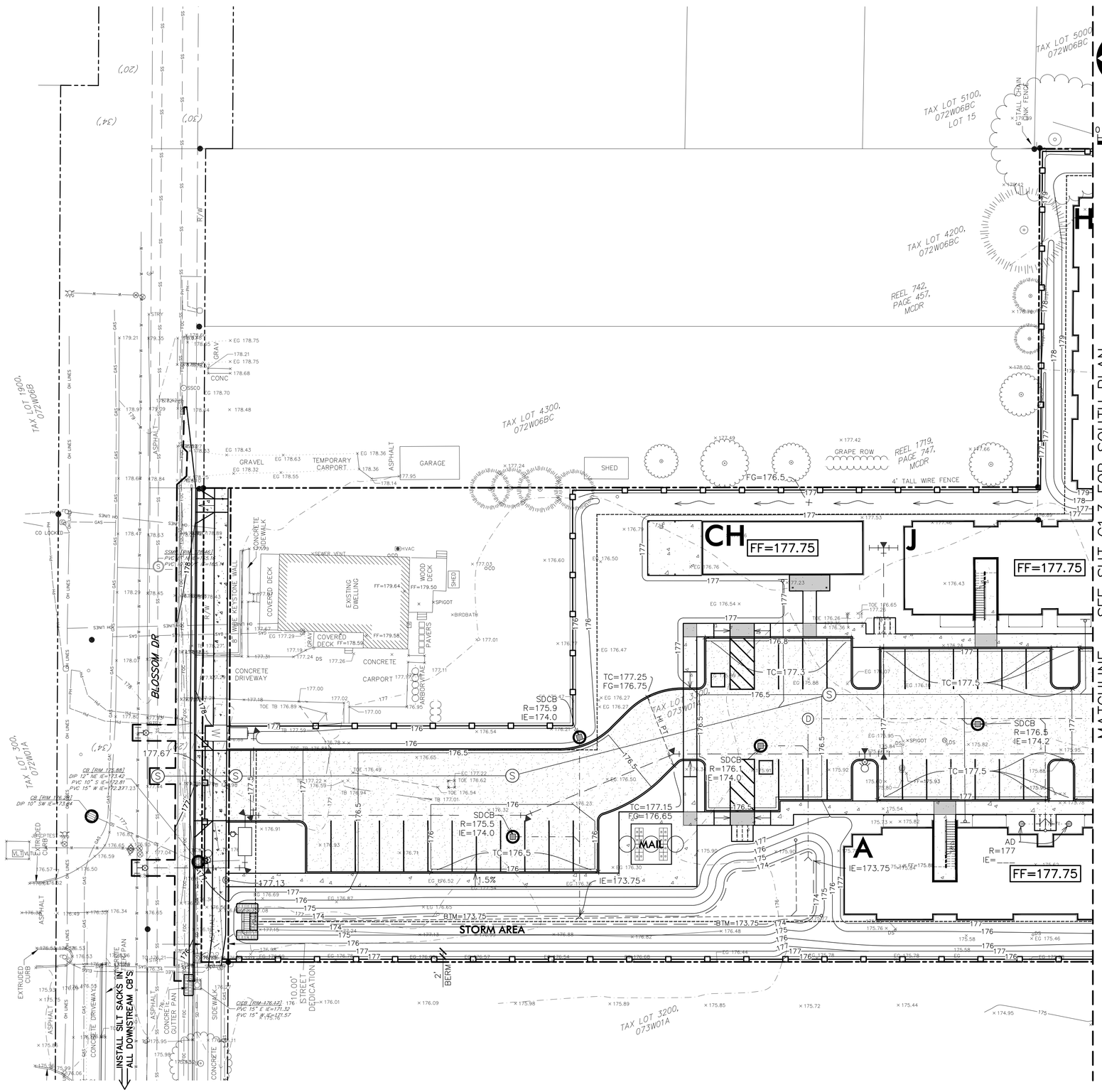

EROSION CONTROL LEGEND

- SILT SACK
- BIO-BAG
- SILT FENCE

NO.	DATE	DESCRIPTION	BY
1			

REVISIONS

VERIFY SCALE
BAR IS ONE INCH ON ORIGINAL DRAWING
0 1"
IF NOT ONE INCH ON THIS SHEET, ADJUST SCALES ACCORDINGLY

DSN. JW
DRN. AK
CKD. JW
DATE: 06/2022

REGISTERED PROFESSIONAL ENGINEER
WILLIAM J. WELLS
REVIEW
RENEWS: 6/30/2024

WESTECH ENGINEERING, INC.
CONSULTING ENGINEERS AND PLANNERS
3841 Fairview Industrial Dr. S.E., Suite 100, Salem, OR 97302
Phone: (503) 585-2474 Fax: (503) 585-3986
E-mail: westech@westech-eng.com

CLUTCH INDUSTRIES
BLOSSOM APARTMENTS

EROSION CONTROL – STREETS & UTILITIES (N)

DRAWING
C1.2

JOB NUMBER
3366.0000.0

11/28/2022 6:49:09 AM
C:\Users\CAD\Desktop\Work (PC)\Projects\Clutch Industries\Blossom\Civil\Plats\C1.2 – Erosion Control – Streets & Utilities.dwg, (C1.2 tab)

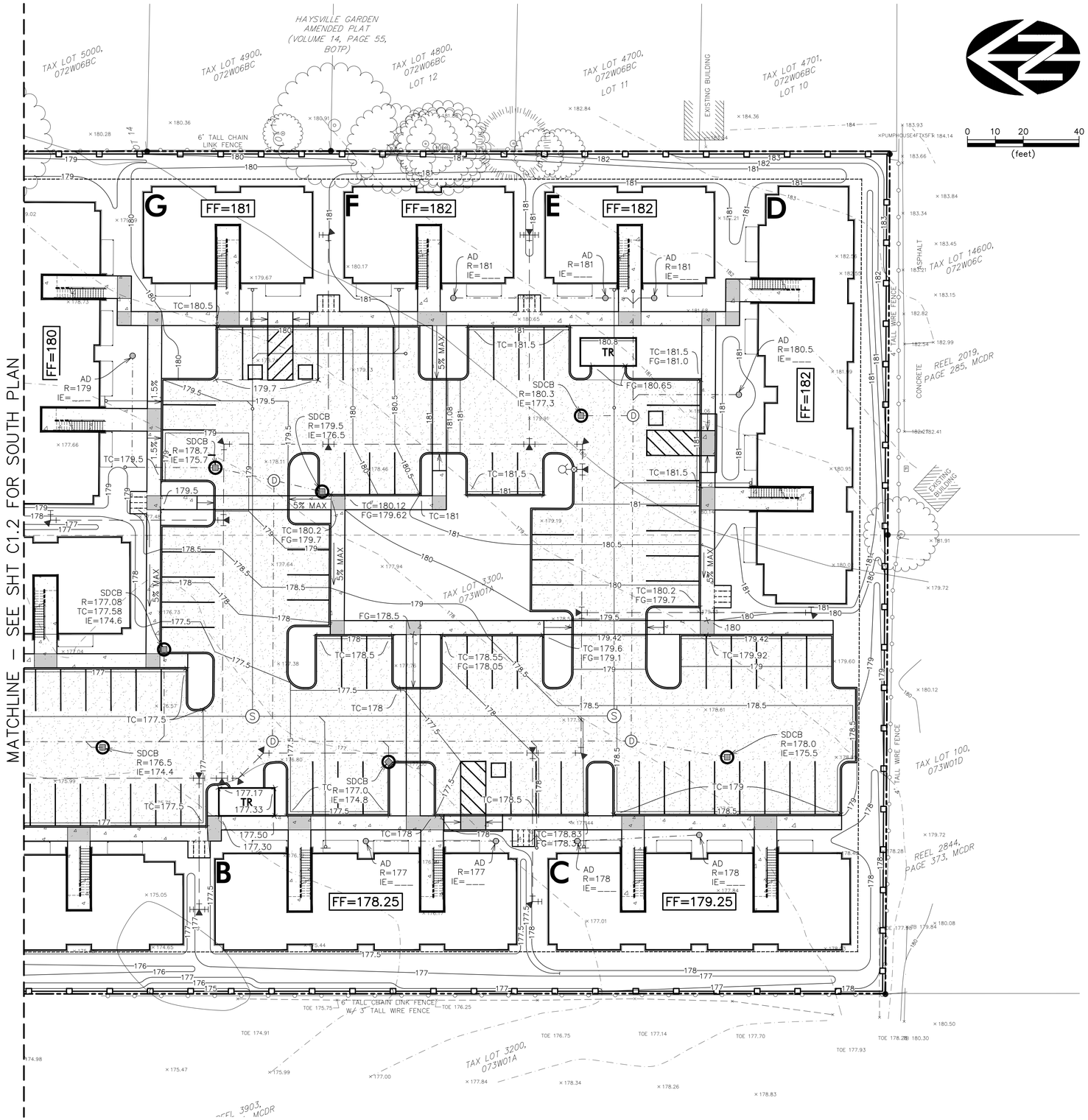

EROSION CONTROL LEGEND

- SILT SACK
- BIO–BAG
- SILT FENCE

NO.	DATE	DESCRIPTION	BY
1			

REVISIONS

VERIFY SCALE
BAR IS ONE INCH ON ORIGINAL DRAWING
0 1"
IF NOT ONE INCH, OR THIS SHEET, ADJUST SCALES ACCORDINGLY

DSN. JW
DRN. AK
CKD. JW
DATE: 06/2022

REVIEW
REVIEWS: 5/30/2024

WESTECH ENGINEERING, INC.
CONSULTING ENGINEERS AND PLANNERS
3841 Fairview Industrial Dr. S.E., Suite 100, Salem, OR 97302
Phone: (503) 585–2474 Fax: (503) 585–3986
E–mail: westech@westech–eng.com

CLUTCH INDUSTRIES
BLOSSOM APARTMENTS

EROSION CONTROL – STREETS & UTILITIES (S)

DRAWING
C1.3

JOB NUMBER
3366.0000.0

11/28/2022 6:49:13 AM
C:\Users\CAD\Desktop\Work (PC)\Projects\Clutch Industries\Blossom\Civil\Plots\C1.2 – Erosion Control – Streets & Utilities.dwg, (C1.3 tab)

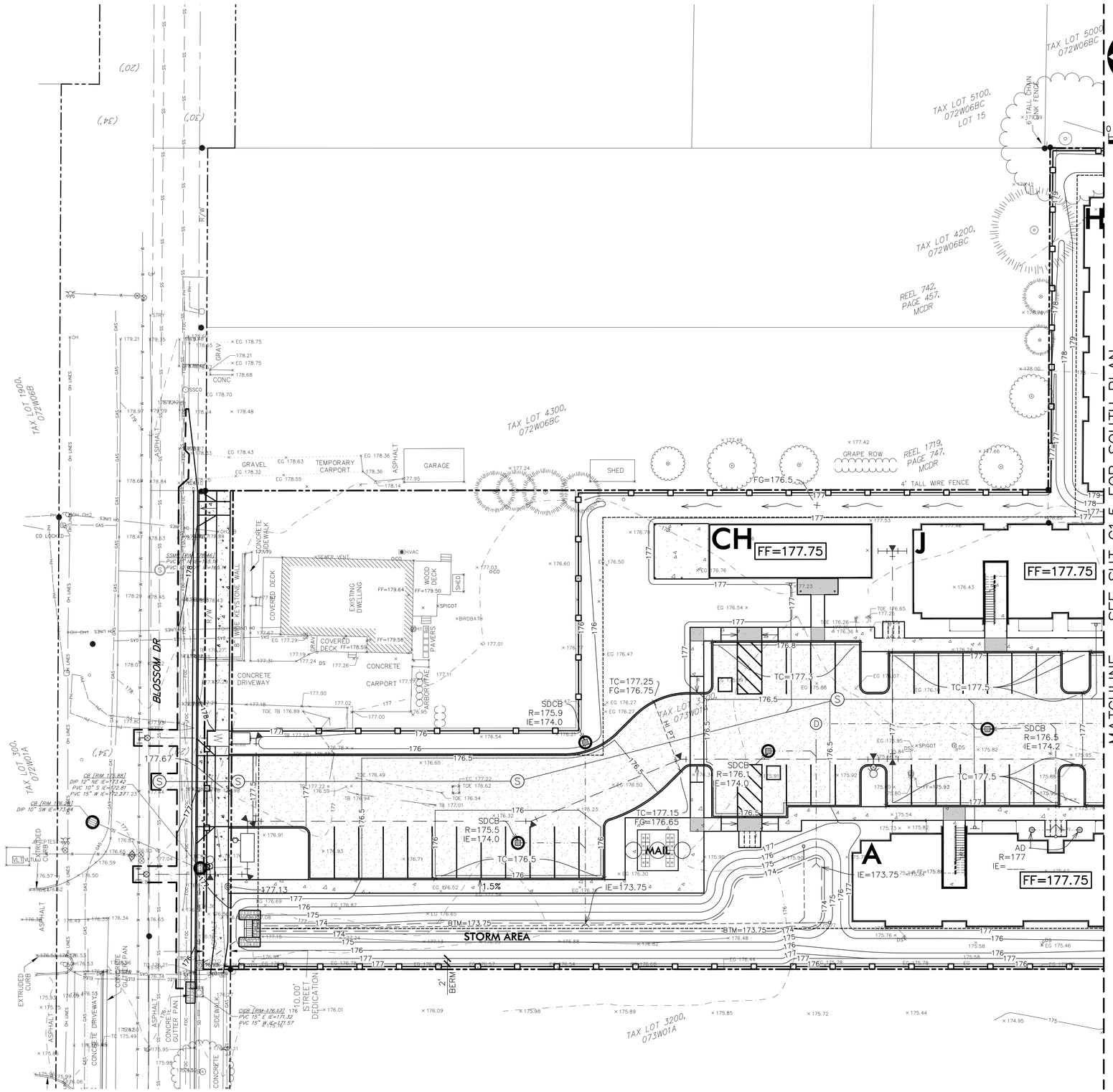

EROSION CONTROL LEGEND

- SILT SACK
- BIO-BAG
- SILT FENCE

NO.	DATE	DESCRIPTION	BY
1			

REVISIONS

VERIFY SCALE
BAR IS ONE INCH ON ORIGINAL DRAWING
0 1"
IF NOT ONE INCH ON THIS SHEET, ADJUST SCALES ACCORDINGLY

DSN. JW
DRN. AK
CKD. JW
DATE: 06/2022

REVIEW
REGISTERED PROFESSIONAL ENGINEER
WILLIAM J. WELLS
RENEWS: 6/30/2024

WESTECH ENGINEERING, INC.
CONSULTING ENGINEERS AND PLANNERS
3841 Fairview Industrial Dr. S.E., Suite 100, Salem, OR 97302
Phone: (503) 585-2474 Fax: (503) 585-3986
E-mail: westech@westech-eng.com

CLUTCH INDUSTRIES
BLOSSOM APARTMENTS

EROSION CONTROL – VERTICAL CONSTRUCTION (N)

DRAWING
C1.4

JOB NUMBER
3366.0000.0

11/28/2022 6:49:24 AM
C:\Users\CAD\Desktop\Work (PC)\Projects\Clutch Industries\Blossom\Civil\Plots\C1.4 – Erosion Control – Vertical Construction.dwg, (C1.4 tab)

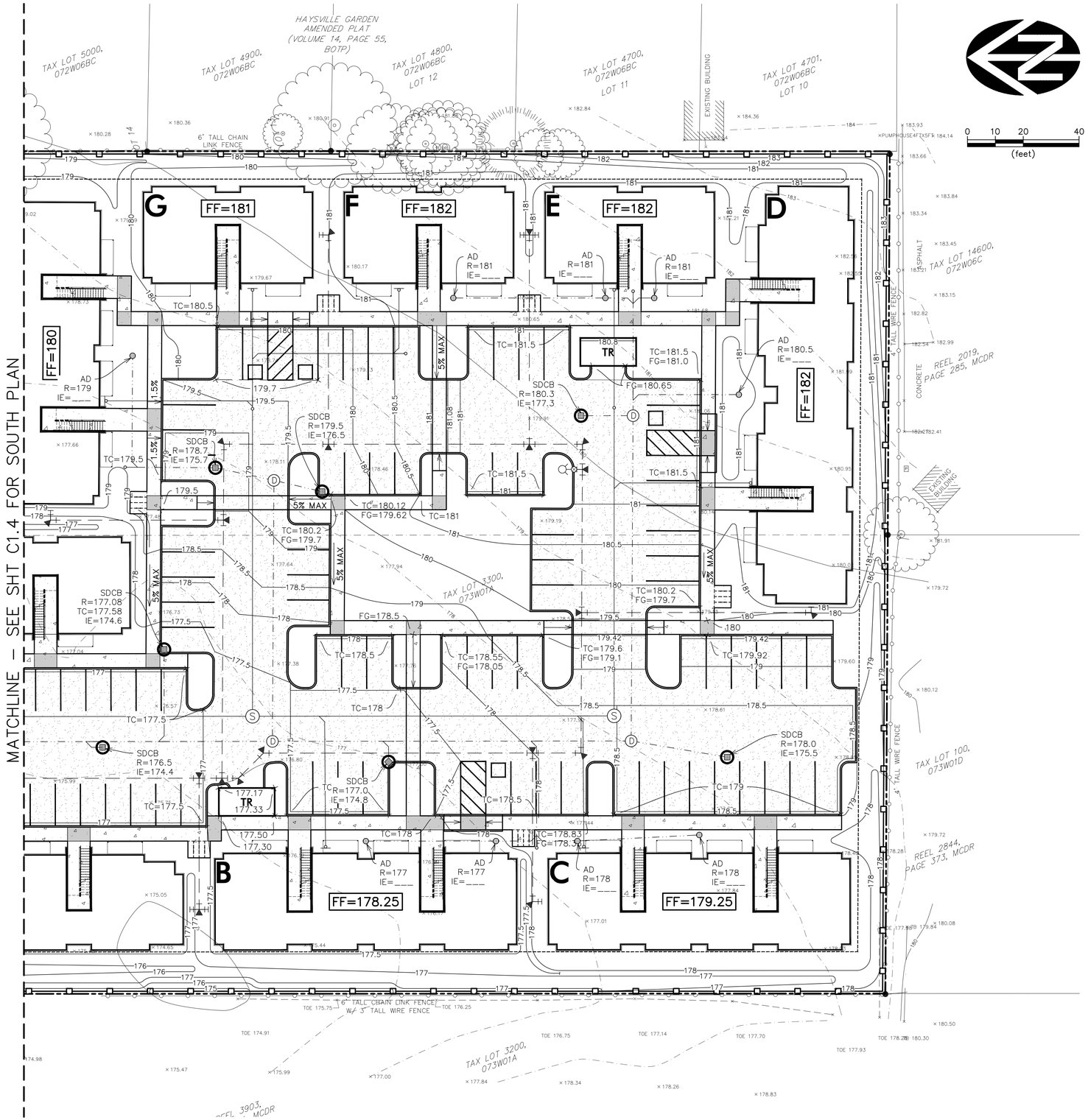

EROSION CONTROL LEGEND

- SILT SACK
- BIO–BAG
- SILT FENCE

NO.	DATE	DESCRIPTION	BY
1		REVISIONS	

VERIFY SCALE
BAR IS ONE INCH ON ORIGINAL DRAWING
0 1"
IF NOT ONE INCH ON THIS SHEET, ADJUST SCALES ACCORDINGLY

DSN. JW
DRN. AK
CKD. JW
DATE: 06/2022

REVIEW
REVIEWS: 5/30/2024

WESTECH ENGINEERING, INC.
CONSULTING ENGINEERS AND PLANNERS
3841 Fairview Industrial Dr. S.E., Suite 100, Salem, OR 97302
Phone: (503) 585–2474 Fax: (503) 585–3986
E–mail: westech@westech–eng.com

CLUTCH INDUSTRIES
BLOSSOM APARTMENTS

EROSION CONTROL – VERTICAL CONSTRUCTION (S)

DRAWING
C1.5

JOB NUMBER
3366.0000.0

11/28/2022 6:49:28 AM
C:\Users\CAD\Desktop\Work (PC)\Projects\Clutch Industries\Blossom\Civil\Plots\C1.4 – Erosion Control – Vertical Construction.dwg, (C1.5 tab)

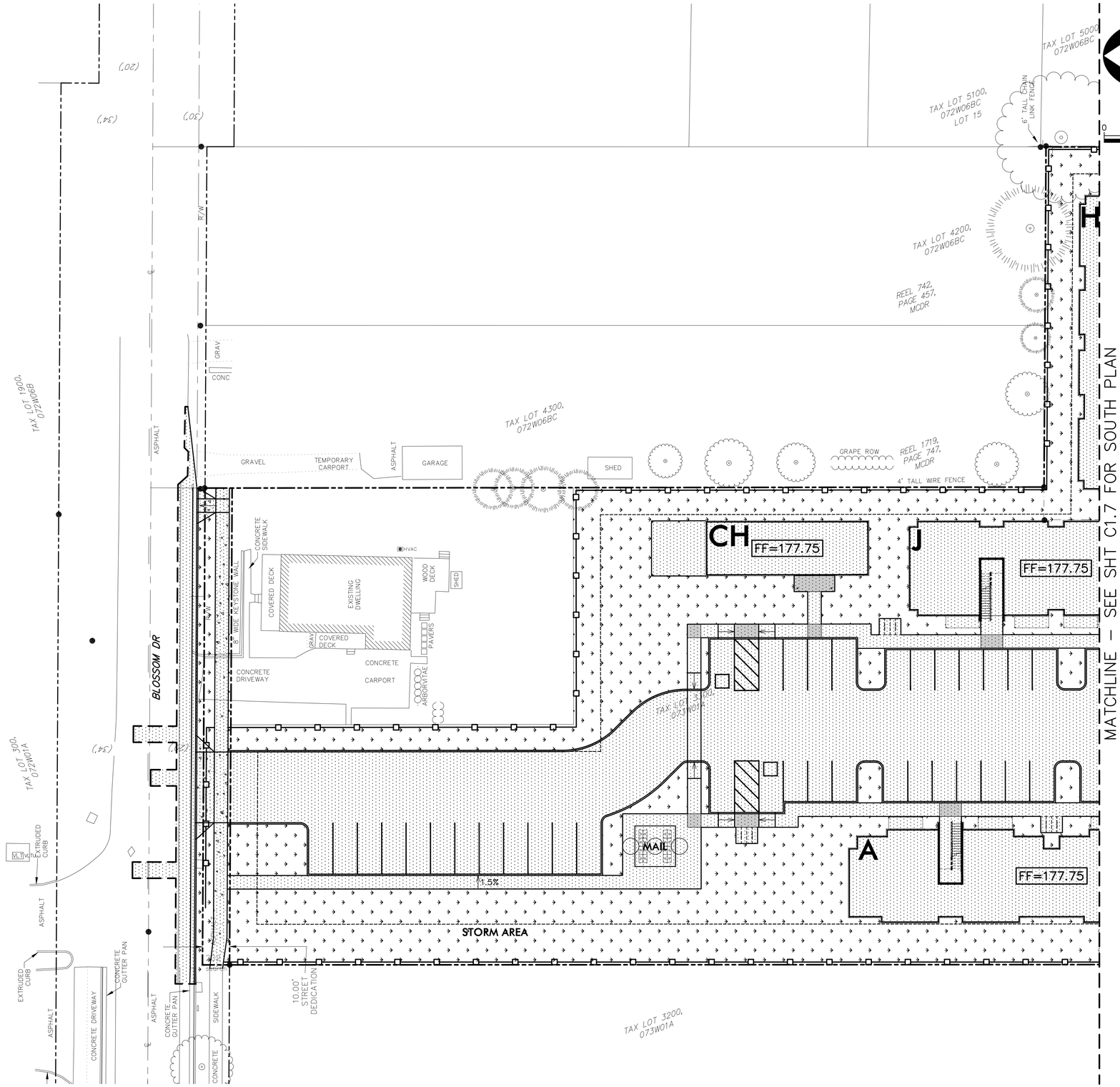

0 10 20 40
(feet)

SURFACING LEGEND

NEW IMPERVIOUS SURFACE

IF NOT SHOWN TO BE LANDSCAPED, CONTRACTOR TO HYDROSEED

NO.	DATE	DESCRIPTION	BY
1			

REVISIONS

VERIFY SCALE
BAR IS ONE INCH ON ORIGINAL DRAWING
0 1"
IF NOT ONE INCH, ON THIS SHEET, ADJUST SCALES ACCORDINGLY

DSN. JW
DRN. AK
CKD. JW
DATE: 06/2022

REGISTERED PROFESSIONAL ENGINEER
OREGON
WILLIAM J. WELLS
REVIEW
RENEWS: 6/30/2024

WESTECH ENGINEERING, INC.
CONSULTING ENGINEERS AND PLANNERS
3841 Fairview Industrial Dr. S.E., Suite 100, Salem, OR 97302
Phone: (503) 585-2474 Fax: (503) 585-3986
E-mail: westech@westech-eng.com

CLUTCH INDUSTRIES
BLOSSOM APARTMENTS

EROSION CONTROL – FINAL LANDSCAPING & STABILIZATION (N)

DRAWING
C1.6

JOB NUMBER
3366.0000.0

11/28/2022 6:49:37 AM
C:\Users\CAD\Desktop\Work (PC)\Projects\Clutch Industries\Blossom\Civil\Plots\C1.6 – Erosion Control – Final Landscaping & Stabilization.dwg, (C1.6 tab)

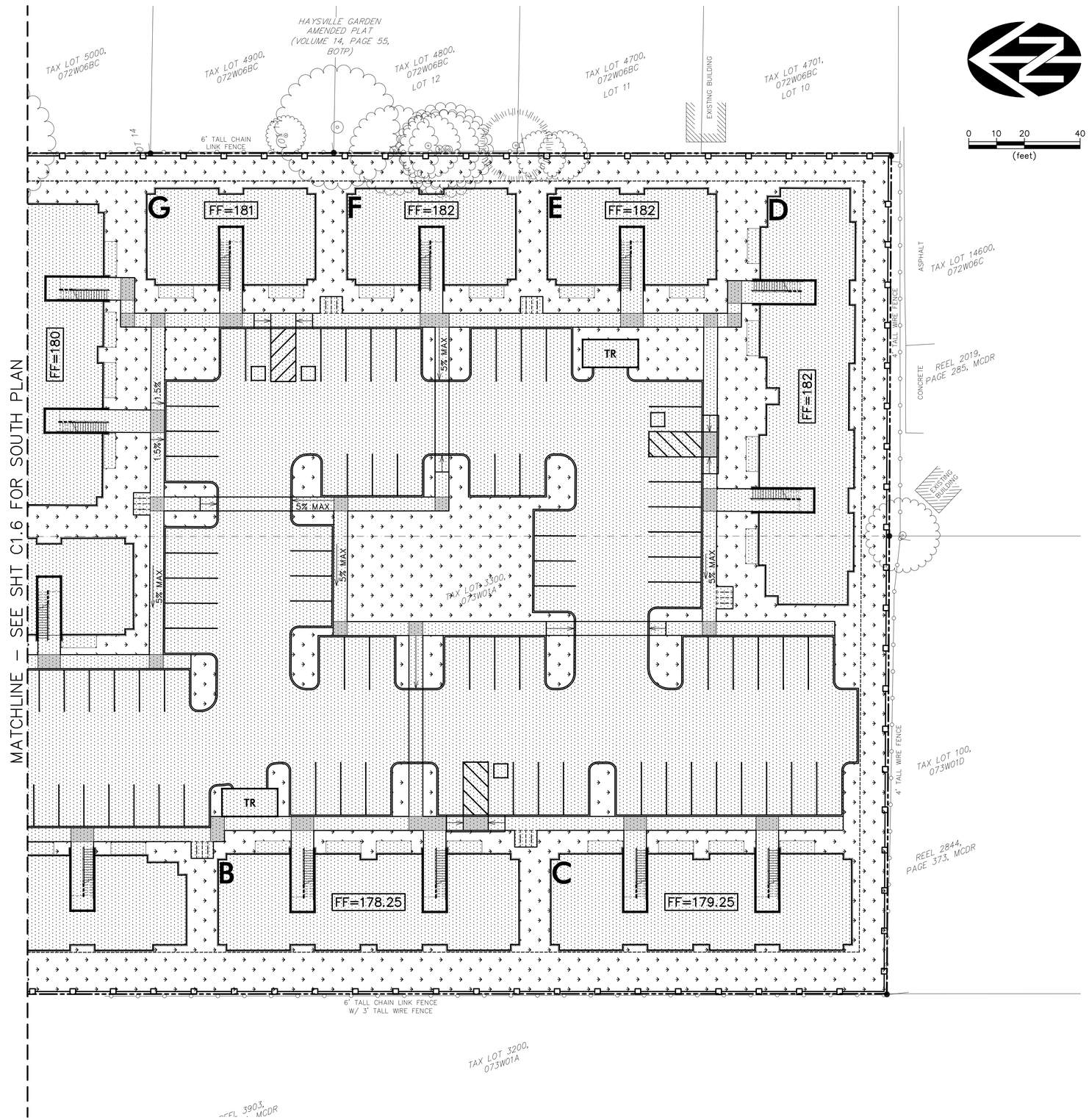

SURFACING LEGEND

- NEW IMPERVIOUS SURFACE
- IF NOT SHOWN TO BE LANDSCAPED, CONTRACTOR TO HYDROSEED.

NO.	DATE	DESCRIPTION	BY
1			

REVISIONS

VERIFY SCALE
BAR IS ONE INCH ON ORIGINAL DRAWING
0 1"
IF NOT ONE INCH, OF THIS SHEET, ADJUST SCALES ACCORDINGLY

DSN. JW
DRN. AK
CKD. JW
DATE: 06/2022

REVIEW
REGISTERED PROFESSIONAL ENGINEER
WILLIAM J. WELLS
RENEWS: 6/30/2024

WESTECH ENGINEERING, INC.
CONSULTING ENGINEERS AND PLANNERS
3841 Fairview Industrial Dr. S.E., Suite 100, Salem, OR 97302
Phone: (503) 585-2474 Fax: (503) 585-3986
E-mail: westech@westech-eng.com

CLUTCH INDUSTRIES
BLOSSOM APARTMENTS

EROSION CONTROL – FINAL LANDSCAPING & STABILIZATION (S)

DRAWING
C1.7

JOB NUMBER
3366.0000.0

DEQ EROSION CONTROL STANDARD NOTES:

1. Include a list of all personnel (by name and position) that are responsible for the design, installation and maintenance of stormwater control measures (e.g. ESCP developer, BMP installer (see Section 4.10), as well as their individual responsibilities. (Section 4.4.c.ii)
2. Visual monitoring inspection reports must be made in accordance with DEQ 1200–C permit requirements. (Section 6.5)
3. Inspection logs must be kept in accordance with DEQ's 1200–C permit requirements. (Section 6.5.q)
4. Retain a copy of the ESCP and all revisions on site and make it available on request to DEQ, Agent, or the local municipality. (Section 4.7)
5. The permit registrant must implement the ESCP. Failure to implement any of the control measures or practices described in the ESCP is a violation of the permit. (Sections 4 and 4.11)
6. The ESCP must be accurate and reflect site conditions. (Section 4.8)
7. Submission of all ESCP revisions is not required. Submittal of the ESCP revisions is only under specific conditions. Submit all necessary revision to DEQ or Agent within 10 days. (Section 4.9)
8. Sequence clearing and grading to the maximum extent practical to prevent exposed inactive areas from becoming a source of erosion. (Section 2.2.2)
9. Create smooth surfaces between soil surface and erosion and sediment controls to prevent stormwater from bypassing controls and ponding. (section 2.2.3)
10. Identify, mark, and protect (by construction fencing or other means) critical riparian areas and vegetation including important trees and associated rooting zones, and vegetation areas to be preserved. Identify vegetative buffer zones between the site and sensitive areas (e.g., wetlands), and other areas to be preserved, especially in perimeter areas. (Section 2.2.1)
11. Preserve existing vegetation when practical and re–vegetate open areas. Re–vegetate open areas when practicable before and after grading or construction. Identify the type of vegetative seed mix used. (Section 2.2.5)
12. Maintain and delineate any existing natural buffer within the 50–feet of waters of the state. (Section 2.2.4)
13. Install perimeter sediment control, including storm drain inlet protection as well as all sediment basins, traps, and barriers prior to land disturbance. (Sections 2.1.3)
14. Control both peak flow rates and total stormwater volume, to minimize erosion at outlets and downstream channels and streambanks. (Sections 2.1.1. and 2.2.16)
15. Control sediment as needed along the site perimeter and at all operational internal storm drain inlets at all times during construction, both internally and at the site boundary. (Sections 2.2.6 and 2.2.13)
16. Establish concrete truck and other concrete equipment washout areas before beginning concrete work. (Section 2.2.14)
17. Apply temporary and/or permanent soil stabilization measures immediately on all disturbed areas as grading progresses. Temporary or permanent stabilizations measures are not required for areas that are intended to be left unvegetated, such as dirt access roads or utility pole pads. (Sections 2.2.20 and 2.2.21)
18. Establish material and waste storage areas, and other non–stormwater controls. (Section 2.3.7)
19. Keep waste container lids closed when not in use and close lids at the end of the business day for those containers that are actively used throughout the day. For waste containers that do not have lids, provide either (1) cover (e.g., a tarp, plastic sheeting, temporary roof) to prevent exposure of wastes to precipitation, or (2) a similarly effective means designed to prevent the discharge of pollutants (e.g., secondary containment). (Section 2.3.7)
20. Prevent tracking of sediment onto public or private roads using BMPs such as: construction entrance, graveled (or paved) exits and parking areas, gravel all unpaved roads located onsite, or use an exit tire wash. These BMPs must be in place prior to land–disturbing activities. (Section 2.2.7)
21. When trucking saturated soils from the site, either use water–tight trucks or drain loads on site. (Section 2.2.7.f)
22. Control prohibited discharges from leaving the construction site, i.e., concrete wash–out, wastewater from cleanout of stucco, paint and curing compounds. (Sections 1.5 and 2.3.9)
23. Ensure that steep slope areas where construction activities are not occurring are not disturbed. (Section 2.2.10)
24. Prevent soil compaction in areas where post–construction infiltration facilities are to be installed. (Section 2.2.12)
25. Use BMPs to prevent or minimize stormwater exposure to pollutants from spills; vehicle and equipment fueling, maintenance, and storage; other cleaning and maintenance activities; and waste handling activities. These pollutants include fuel, hydraulic fluid, and other oils from vehicles and machinery, as well as debris, fertilizer, pesticides and herbicides, paints, solvents, curing compounds and adhesives from construction operations.(Sections 2.2.15 and 2.3)
26. Provide plans for sedimentation basins that have been designed per Section 2.2.17 and stamped by an Oregon Professional Engineer. (See Section 2.2.17.a)
27. If engineered soils are used on site, a sedimentation basin/impoundment must be installed. (See Sections 2.2.17 and 2.2.18)
28. Provide a dewatering plan for accumulated water from precipitation and uncontaminated groundwater seepage due to shallow excavation activities. (See Section 2.4)
29. Implement the following BMPs when applicable: written spill prevention and response procedures, employee training on spill prevention and proper disposal procedures, spill kits in all vehicles, regular maintenance schedule for vehicles and machinery, material delivery and storage controls, training and signage, and covered storage areas for waste and supplies. (Section 2.3)
30. Use water, soil–binding agent or other dust control technique as needed to avoid wind–blown soil. (Section 2.2.9)
31. The application rate of fertilizers used to reestablish vegetation must follow manufacturer's recommendations to minimize nutrient releases to surface waters. Exercise caution when using time–release fertilizers within any waterway riparian zone. (Section 2.3.5)
32. If an active treatment system (for example, electro–coagulation, flocculation, filtration, etc.) for sediment or other pollutant removal is employed, submit an operation and maintenance plan (including system schematic, location of system, location of inlet, location of discharge, discharge dispersion device design, and a sampling plan and frequency) before operating the treatment system. Obtain Environmental Management Plan approval from DEQ before operating the treatment system. Operate and maintain the treatment system according to manufacturer's specifications. (Section 1.2.9)
33. Temporarily stabilize soils at the end of the shift before holidays and weekends, if needed. The registrant is responsible for ensuring that soils are stable during rain events at all times of the year. (Section 2.2)
34. As needed based on weather conditions, at the end of each workday soil stockpiles must be stabilized or covered, or other BMPs must be implemented to prevent discharges to surface waters or conveyance systems leading to surface waters. (Section 2.2.8)
35. Sediment fence: remove trapped sediment before it reaches one third of the above ground fence height and before fence removal. (Section 2.1.5.b)
36. Other sediment barriers (such as biobags): remove sediment before it reaches two inches depth above ground height and before BMP removal. (Section 2.1.5.c)
37. Catch basins: clean before retention capacity has been reduced by fifty percent. Sediment basins and sediment traps: remove trapped sediments before design capacity has been reduced by fifty percent and at completion of project. (Section 2.1.5.d)
38. Within 24 hours, significant sediment that has left the construction site, must be remediated. Investigate the cause of the sediment release and implement steps to prevent a recurrence of the discharge within the same 24 hours. Any in–stream clean–up of sediment shall be performed according to the Oregon Department of State Lands required timeframe. (Section 2.2.19.a)
39. The intentional washing of sediment into storm sewers or drainage ways must not occur. Vacuuming or dry sweeping and material pickup must be used to cleanup released sediments. (Section 2.2.19)
40. Document any portion(s) of the site where land disturbing activities have permanently ceased or will be temporarily inactive for 14 or more calendar days. (Section 6.5.f.)
41. Provide temporary stabilization for that portion of the site where construction activities cease for 14 days or more with a covering of blown straw and a tackifier, loose straw, or an adequate covering of compost mulch until work resumes on that portion of the site. (Section 2.2.20)
42. Do not remove temporary sediment control practices until permanent vegetation or other cover of exposed areas is established. Once construction is complete and the site is stabilized, all temporary erosion controls and retained soils must be removed and disposed of properly, unless needed for long term use following termination of permit coverage. (Section 2.2.21)

Rev. 12/15/20
By: Blair Edwards

YEAR: MONTH:	'23 05	'23 06	'23 07	'23 08	'23 09	'23 10	'23 11	'23 12	'24 01	'24 02	'24 03	'24 04
CLEARING	X	X										
EXCAVATION	X	X	X	X	X	X	X	X	X	X	X	X
GRADING	X	X	X	X	X							
CONSTRUCTION	X	X	X	X	X	X	X	X	X	X	X	X
SEDIMENT CONTROLS:												
Silt Fencing	X	X	X	X	X	X	X	X	X	X	X	X
Sediment Traps	X	X	X	X	X	X	X	X	X	X	X	X
Sediment Basins												
Storm Inlet Protection	X	X	X	X	X	X	X	X	X	X	X	X
Drainage Swales												
Check Dams												
Contour Furrows												
Terracing												
Pipe Slope Drains												
Rock Outlet Protection												
Gravel Construction Entrance	X	X	X	X	X	X	X	X				
Grass–lined Channel (Turf Reinforcement Mats)												
Protection of trees with construction fences												
Temporary Seeding and Planting							X	X	X			
Permanent Seeding and Planting										X	X	X
Other:												

CONTROL MEASURE	PHASE 1	PHASE 2	PHASE 3	PHASE 4	PHASE 5
Silt Fencing	X	X	X	X	
Construction Entrance	X	X			
Sediment Traps	X	X	X	X	
Storm Inlet Protection	X	X	X	X	
Concrete Washout	X	X	X		
Rock Outlet Protection			X	X	X
Permanent Seeding and Planting					X

Phase 1: Prior to Ground Disturbance
Phase 2: After Completion of Rough Grading
Phase 3: After Installation of Storm Facilities
Phase 4: After Paving & Construction
Phase 5: After Project Completion and Cleanup

BMP Rationale

A comprehensive list of available Best Management Practices (BMP) options based on DEQ's 1200–C Permit Application and ESCP Guidance Document has been reviewed to complete this Erosion and Sediment Control Plan. Some of the above listed BMPs were not chosen because they were determined to not effectively manage erosion prevention and sediment control for this project based on specific site conditions, including soil conditions, topographic constraints, accessibility to the site, and other related conditions. As the project progresses and there is a need to revise the ESCP, an Action Plan will be submitted.

SOIL TYPE(S): PER MARION CO. SOIL SURVEY THE SITE SOILS INCLUDE "WOOBURN SILT LOAM, 0–3% SLOPES."

EROSION HAZARD: PER MARION CO. SOIL SURVEY EROSION HAZARD IS "SLIGHT."

SITE AREA: 3.5 Ac

DISTURBANCE AREA: 3.5 Ac

LOCAL RAIN GAGE: SALEM AIRPORT MCNARY FIELD OR, US LAT/LONG 44.905,–123.0011

INSPECTION FREQUENCY FOR BMP

Site Condition	Minimum Frequency
1. Active period	On initial date that land disturbance activities commence. Within 24 hours of any storm event, including runoff from snow melt, that results in discharge from the site. At least once every 14 days, regardless of whether stormwater runoff is occurring.
2. Inactive periods greater than fourteen (14) consecutive calendar days	The Inspector may reduce the frequency of inspections in any area of the site where the stabilization steps in Section 2.2.20 have been completed to twice per month for the first month, no less than 14 calendar days apart, then once per month.
3. Periods during which the site is inaccessible due to inclement weather	If safe, accessible and practical, inspections must occur daily at a relevant discharge point or downstream location of the receiving waterbody.
4. Periods during which construction activities are suspended and runoff is unlikely due to frozen conditions.	Visual monitoring inspections may be temporarily suspended. Immediately resume monitoring upon thawing, or when weather conditions make discharges likely.
5. Periods during which construction activities are conducted and runoff is unlikely during frozen conditions.	Visual monitoring inspections may be reduced to once a month. Immediately resume monitoring upon thawing, or when weather conditions make discharges likely.

Spill Prevention Procedures and Response

- Spill prevention is an important factor in the successful operation of a storm water injection management system. All contractor employees will be trained on this plan so that they are certain of the location of materials, who to notify in case of a spill, and how to initially contain the spill of hazardous materials. Contractor employees shall never dispose waste materials into the storm water collection/treatment system. Contractor employees will be observant of other potential contamination occurrences. All contractor employees will review this plan especially with regards to the detailed spill response steps.
- This data will be posted in an accessible area at the site.

What to do in case of a spill

1. Spill kit to be located near the job trailer or another conspicuous location and clearly marked.
2. Get the spill kit.
   a. If possible, determine visually what types of fluids have been spilled.
   b. Put on gloves and glasses or any other necessary Personal Protective Equipment (PPE).
   c. Get the absorbent material provided in the kit and the drain block cover.
   d. Place the absorbent materials in the path of the spill.
   e. Remove any debris from the vicinity of the inlet where the spill is draining.
   f. Unroll the drain block cover and place it snugly over the inlet.
   g. Verify that the cover has full contact with the rim of the inlet.
   h. Use snakes, pillow or pigs to completely contain the area.
3. Notify the following personnel immediately:
   a. 1200–C Permit Registrant's Representative
   b. When a spill includes any of the below, notify the Oregon Emergency Response System as soon as the Owner's Representative has knowledge of the release. Oregon Emergency Response System Phone: 1–800–452–0311
      i. Any amount of oil to waters of the state;
      ii. Oil spills on land in excess of 42 gallons;
      iii. Hazardous materials that are equal to, or greater than, the quantity listed in the Code of Federal Regulations, 40 CFR Part 302 (List of Hazardous Substances and Reportable Quantities), and amendments adopted before July 1, 2002

NOTE: Only dry cleanup methods will be employed to clean up spills (i.e., no use of water to wash spilled materials from pavement will be conducted). All spill cleanups shall be conducted in accordance with applicable regulations.

Responsible Personnel

In case of spill contact the General Contractor and 1200–C Permit Registrant's Representative immediately. The Permit Registrant's Representative will be responsible for either managing the spill clean up for minor spills or contacting/retaining a company for the cleanup of major spills.

Waste Management Procedures

Activities performed onsite shall implement the following to eliminate the discharge of waste:

1. Locate activities that include waste products away from waters of the state and stormwater inlets or conveyances so that stormwater coming into contact with these activities cannot reach waters of the state;
2. Ensure adequate supplies are available at all times to handle spills, leaks, and disposal of liquids, and provide secondary containment (e.g. spill berms, decks, spill containment pallets);
3. Have a spill kit available on site and ensure personnel are available to respond expeditiously in the event of a leak or spill;
4. Clean up spills or contaminated surfaces immediately using dry clean up measures (do not clean contaminated surfaces by hosing the area down), and eliminate the source of the spill to prevent a discharge or a continuation of an ongoing discharge; and
5. Store materials in a covered area (e.g., plastic sheeting, temporary roofs), or in secondary containment to prevent the exposure of these containers to precipitation or stormwater runoff, or a similarly effective means designed to prevent the discharge of pollutants from these areas.
6. Building Materials & Building Products: Minimize material exposure in cases where the exposure to precipitation or to stormwater will result in a discharge of pollutants (e.g. elevate materials from soil to prevent leaching of pollutants).

Fertilizers, pesticides, herbicides, & insecticides

Comply with all application and disposal requirements included on the registered pesticide, herbicide, insecticide, and fertilizer label. When applying fertilizers, registrants must:

1. Apply at a rate and in amounts consistent with manufacturer's specifications;
2. Apply at the appropriate time of year for the location, and preferably timed to coincide as closely as possible to the period of maximum vegetation uptake and growth;
3. Avoid applying before heavy rains that could cause excess nutrients to be discharged;
4. Never apply to frozen ground;
5. Never apply to stormwater conveyance channels; and
6. Follow all other federal, state, and local requirements regarding fertilizer application.

Authorized non–stormwater discharges anticipated for the proposed project:

1. Landscape irrigation
2. Dust control water
3. Water line flushing (potable)

Potential pollutant–generating activities anticipated for the proposed project including an inventory of pollutants for each activity:

1. Mass Grading, Street & Utility Construction
   a. Sediment
   b. Vehicle and machinery related pollutants (Fuels, hydraulic fluid, oils)
2. Vertical Construction
   a. Paints, caulks, sealants, solvents
   b. Fluorescent light ballasts
   c. Sediment
   d. Vehicle and machinery related pollutants (Fuels, hydraulic fluid, oils)
3. Landscaping & Irrigation
   a. Fertilizers
   b. Pesticides, Herbicides, Insecticides

EROSION CONTROL INSPECTION RESPONSIBILITIES:

1. PRIOR TO CONTRACT AWARD, INSPECTOR TO BE DANIEL THOMPSON AT WESTECH ENGINEERING, INC. (503–585–2474), ID# ECO–3–5342007, EXPIRES MAY 24, 2023.
2. AFTER CONTRACT AWARD AND PRIOR TO CONSTRUCTION, THE CONTRACTOR SHALL ACQUIRE THE SERVICES OF A CERTIFIED EROSION CONTROL INSPECTOR MEETING DEQ REQUIREMENTS UNDER THE 1200–C PERMIT AND NOTIFY DEQ OF THE CERTIFIED EROSION CONTROL INSPECTOR.

NO.	DATE	DESCRIPTION	BY
1			

REVISIONS

VERIFY SCALE
BAR IS ONE INCH ON ORIGINAL DRAWING
0 1"
IF NOT ONE INCH, ON THIS SHEET, ADJUST SCALES ACCORDINGLY

DSN. JW
DRN. AK
CKD. JW
DATE: 06/2022

REGISTERED PROFESSIONAL ENGINEER
OREGON
WILLIAM J. WELLS
REVIEW
RENEWS: 6/30/2024

WESTECH ENGINEERING, INC.
CONSULTING ENGINEERS AND PLANNERS
3841 Fairview Industrial Dr. S.E., Suite 100, Salem, OR 97302
Phone: (503) 585–2474 Fax: (503) 585–3986
E–mail: westech@westech–eng.com

CLUTCH INDUSTRIES
BLOSSOM APARTMENTS

EROSION CONTROL NOTES

DRAWING
C1.8

JOB NUMBER
3366.0000.0

SUPPLEMENTAL WESTECH NOTES:

1. Erosion control measures shall be maintained in such a manner as to ensure that sediment and sediment–laden water does not enter the drainage system, roadways, or violate applicable water quality standards.

2. The erosion control construction, maintenance, replacement and upgrading of the erosion control facilities is the responsibility of the 1200–C Permit Registrant until all construction is completed and approved, and permanent erosion control (i.e. vegetation/landscaping) is established on all disturbed areas.

3. All recommended erosion control procedures are dependent on construction methods, staging, site conditions, weather and scheduling. During the construction period, erosion control facilities shall be upgraded as necessary due to unexpected storm events and to ensure that sediment and sediment laden water does not leave the site.

4. The 1200–C Permit Registrant is responsible for control of sediment transport within project limits. If an installed erosion control system does not adequately contain sediment on site, then the erosion control measures shall be adjusted or supplemented by the 1200–C Permit Registrant as necessary to ensure that sediment laden water does not leave the site. Additional measures shall be provided as required to ensure that all paved areas are kept clean for the duration of the project. Additional interim measures will include, at a minimum, installation of silt fences in accordance with the details shown on the drawings. These measures shall be installed along all exposed embankments and cut slopes to prevent sediment transport.

5. All existing and newly constructed storm inlets and drains shall be protected until pavement surfaces are completed and/or vegetation is established.

6. Erosion control facilities and sediment fences on active sites shall be inspected by the 1200–C Permit Registrant at least daily during any period with measurable precipitation. Any required repairs or maintenance shall be completed immediately. The erosion control facilities on inactive sites shall be inspected and maintained by the 1200–C Permit Registrant a minimum of once a month or within 24 hours following the start of a storm event.

7. All catch basins and conveyance lines shall be cleaned prior to paving. The cleaning operation shall not flush sediment–laden water into the downstream system. The 1200–C Permit Registrant shall remove all accumulated sediment from all impacted catch basins and storm pipes prior to acceptance by the Owner.

8. The 1200–C Permit Registrant is solely responsible for protection of all adjacent property and downstream facilities from erosion and siltation during project construction. Any damage resulting from such erosion and siltation shall be corrected at the sole expense of the 1200–C Permit Registrant.

9. Locate any portable toilets away from waters of the state and stormwater inlets or conveyances. Position portable toilets so they are secure and will not be tipped or knocked over.

10. The 1200–C Permit Registrant shall provide site watering as necessary to prevent wind erosion of fine–grained soils.

11. Unless otherwise indicated on the drawings, all temporary erosion control facilities, including sediment fences, silt sacks, bio–bags, etc. shall be removed within 30 days after permanent landscaping/vegetation is established.

12. Sediment fences shall be constructed of continuous filter fabric to avoid use of joints. When joints are necessary, filter cloth shall be spliced together only at a support post, with a minimum 6–inch overlap, and both ends securely fastened to a post.

13. Sediment fence shall be installed per drawing details. Sediment fences shall have adequate support to contain all silt and sediment captured.

14. The standard strength filter fabric shall be fastened securely to stitched loops installed on the upslope side of the posts, and 6 inches of the fabric shall be extended into the trench. The fabric shall not extend more than 30 inches above the original ground surface. Filter fabric shall not be stapled to existing trees.

15. Bio–filter bags shall be clean 100 percent wood product waste. Bags shall be 18–inch x 18–inch x 30–inch, weigh approximately 45 lbs., and be contained in a bag made of 1/2–inch plastic mesh.

16. Sediment barriers shall be maintained until the up–slope area has been permanently stabilized. At no time shall more than 10–inches of sediment be allowed to accumulate behind sediment fences. No more than 2 inches of sediment shall be allowed to accumulate behind bio–filter bags. Sediment shall be removed prior to reaching the above stated depths. New sediment barriers shall be installed uphill as required to control sediment transport.

17. Stabilized construction entrances shall be installed at the beginning of construction and maintained for the duration of the project. Additional measures may be required to ensure that all paved areas are kept clean for the duration of the project.

18. The 1200–C Permit Registrant shall verify that all trucks are well sealed when transporting saturated soils from the site. Water drippage from trucks transporting saturated soils must be reduced to less than 1 gallon per hour prior to leaving the site.

19. The entrance shall be maintained in a condition that will prevent tracking or flow of mud onto the public right–of–way or approved access point. The entrance may require periodic top dressing as conditions demand, and repair and/or cleanout of any structures used to trap sediment.

20. All materials spilled, dropped, washed, or tracked from vehicles onto roadways or into storm drains must be removed immediately, and protection provided for downstream inlets and catch basins to ensure sediment laden water does not enter the storm drain system.

21. Temporary grass cover measures must be fully established by October 15th, or other cover measures (ie. erosion control blankets with anchors, 3–inches minimum of straw mulch, 6 mil HDPE plastic sheet, etc.) shall be in place over all disturbed soil areas until April 30th. To establish an adequate grass stand for controlling erosion by October 15th, it is recommended that seeding and mulching occur by September 1st. Straw mulch, if used, shall not leave any bare ground visible through the straw.

22. Minimum slope protection. For slopes steeper than 3H:1V but less than 2H:1V, use Tensar/North American Green Type S150 erosion control blanket. For slopes 2H:1V or steeper, use Tensar/North American Green Type SC150 erosion control blanket. Use a minimum of 2–inches straw mulch or Tensar/North American Green Type S150 for slopes flatter than 3H:1V. Slope protection shall be placed on all disturbed areas immediately after completion of each section of construction activity, until the erosion control seeding has been established. As an option during temporary or seasonal work stoppages, a 6–mil HDPE plastic sheet may be placed on exposed slopes. The plastic sheet shall be provided with an anchor trench at the top and bottom of the slope, and shall be sandbagged on the slopes as required to prevent damage or displacement by wind.

23. Permanent erosion control vegetation on all embankments and disturbed areas shall be re–established as soon as construction is completed.

24. Soil preparation. Topsoil should be prepared according to landscape plans, if available, or recommendations of grass seed supplier. It is recommended that slopes be textured before seeding by rack walking (ie. driving a crawling tractor up and down the slopes to leave a pattern of cleat imprints parallel to slope contours) or other method to provide stable areas for seeds to rest.

25. When used, hydromulch shall be applied with grass seed at a rate of 2000 lbs. per acre between April 30 and June 10, or between September 1 and October 1. On slopes steeper than 10 percent, hydroseed and mulch shall be applied with a bonding agent (tackifier). Application rate and methodology to be in accordance with seed supplier recommendations.

26. When used in lieu of hydromulch, dry, loose, weed free straw used as mulch shall be applied at a rate of 4000 lbs. per acre (double the hydromulch application requirement). Anchor straw by working in by hand or with equipment (rollers, cleat trackers, etc.). Mulch shall be spread uniformly immediately following seeding.

27. When conditions are not favorable to germination and establishment of the grass seed, the seeded and mulched areas shall be irrigated as required to establish the grass cover.

28. Seeding. Recommended erosion control grass seed mix is as follows. Dwarf grass mix (low height, low maintenance) consisting of dwarf perennial ryegrass (80 % by weight), creeping red fescue (20 % by weight). Application rate shall be 100 lbs. per acre minimum.

29. Grass seed shall be fertilized at a rate of 10 lbs. per 1000 S.F with 16– 16–16 slow release type fertilizer. Development areas within 50 feet of water bodies and wetlands must use a non–phosphorous fertilizer.

30. Prior to starting construction the 1200–C Permit Registrant shall acquire the services of a DEQ Certified Erosion and Sediment Control Inspector and shall submit an "Action Plan" to DEQ identifying their names, contact information, training and experience as required in Schedule A.6.b.i–ii of the 1200–C Permit

31. The 1200–C Permit Registrant shall submit "Notice of Termination" to DEQ to end the 1200–C permit coverage once all soil disturbance activities have been completed and final stabilization of exposed soils has occurred.

32. If there is any conflict, discrepancy, or inconsistency between the DEQ Erosion Control Standard Notes, the Supplemental Westech Notes, or the City of Salem EPSC Plan Standard Notes, the DEQ Notes will control.

CITY OF SALEM PUBLIC WORKS DESIGN STANDARDS:

Division 007 Appendix A–EPSC Plan Standard Notes

(a) PRE–CONSTRUCTION

(1). Prior to any land disturbing activities, the boundaries of the clearing and grading limits, vegetated buffers, and any sensitive areas shown on this plan shall be clearly delineated in the field. Unless otherwise approved, no disturbance is permitted beyond the clearing limits. The Contractor must maintain the delineation for the duration of the project. Note: vegetated corridors to be delineated with orange construction fence or approved equal.

(2). BMPs that must be installed prior to land disturbing activities are construction entrance, perimeter sediment control, and inlet protection.

(3). Hold a preconstruction conference to review the EPSCP and with the City's Project Manager and Inspector.

(b) CONSTRUCTION

(1). All sediment is required to stay on site. Sediment amounts greater than 1/2–cubic foot which leave the site must be cleaned up within 24 hours and placed back on the site and stabilized or properly disposed. Vacuuming or dry sweeping must be used to clean up released sediment and it must not be swept or washed into storm sewers, drainage ways, or water bodies. The cause of the sediment release must be found and prevented from causing a recurrence of the discharge within thesame 24 hours. Any in–stream clean up of sediment shall be performed according to the DSL required time frame.

(2). Construction, maintenance, replacement, and upgrading of erosion prevention and sediment control facilities is the sole responsibility of the Contractor until all construction is completed, approved, and permanent erosion control (i.e., vegetation/landscaping) is established on all disturbed areas.

(3). All recommended erosion prevention and sediment control procedures are dependent on construction methods, staging, site conditions, weather, and scheduling. During the construction period, erosion control facilities shall be revised, upgraded, replaced, or added, to comply with SRC and State and Federal regulatory requirements.

(4). The Contractor is solely responsible for protection of all adjacent property and downstream facilities from erosion and siltation during project construction. Any damage resulting from such erosion and siltation shall be corrected at the sole expense of the Contractor.

(5). When saturated soil is present, water–tight trucks must be used to transport saturated soils from the construction site. Soil may be drained on site at a designated location, using appropriate BMPs. Soil must be drained sufficiently to drip less than one gallon per hour prior to leaving the site.

(6). All materials spilled, dropped, or washed into storm drains must be removed immediately, and the Contractor shall provide protection of downstream inlets and catch basins to ensure sediment–laden water does not enter the storm drain system.

(7). All discharge of sediment–laden water must be treated with an appropriate BMP to remove sediment from discharge waters and to comply with SRC and State and Federal Regulatory Permits.

(8). In areas subject to wind erosion, appropriate BMPs must be used which may include the application of fine water spraying, plastic sheeting, mulching, or other approved measures.

(9). The EPSC measures and BMPs shown on this plan are the minimum requirements for anticipated site conditions. During the construction period, these measures shall be upgraded as needed to maintain compliance with all regulations.

(10). The contractor shall provide onsite water or other appropriate BMPs to prevent dust and wind erosion of fine grain soils.

(11). Disturbed areas must be stabilized after 14 days of inactivity, or immediately if rain is forecasted. See Subsection 7A.1(d)–Wet Weather Period.

(12). During the wet weather work period or when rain is forecasted, all active and inactive soil stock piles must be covered with appropriate plastic sheeting. Plastic sheeting must cover the entire stock pile and be sufficiently anchored.

(c) POLLUTANTS, SOLID WASTE AND HAZARDOUS MATERIALS MANAGEMENT

(1). Any use of toxic or other hazardous materials must include proper storage, application, and disposal.

(2). The contractor is solely responsible to properly manage pollutants, hazardous wastes, used oils, contaminated soils, concrete waste, sanitary waste, liquid waste, or other toxic substances discovered or generated during construction to prevent leakage, spills or release of pollutants to the environment and surface waters.

(3). Contractor shall develop a project specific written spill prevention and response procedures that includes employee training on spill prevention and proper disposal procedures; regular maintenance schedule for vehicles andmachinery; and material delivery and storage controls, signage, material use, and use of covered storage areas for waste and supplies. The plan shall comply with SRC and Federal and State requirements, and shall be available on site at all times.

(d) WET WEATHER PERIOD (OCTOBER 15 THROUGH APRIL 30)

(1). Construction activities must avoid or minimize the duration of disturbed areas.

(2). Temporary stabilization of the site including covering of bare soils with approved BMPs, must be installed at the end of the shift before a holiday or weekend, or at the end of each workday if rainfall is forecast in the next 24 hours.

(3). Temporary stabilization or covering of soil stockpiles and protection of stockpiles located away from construction activity must occur at the end of each workday.

(e) MAINTENANCE

(1). Erosion control measures shall be maintained in such a manner as to ensure that erosion is prevented and sediment–laden water does not enter a drainage system, roadway, or violate applicable water quality standards.

(2). Sediment shall not be washed or swept into storm sewers, drainage ways, or water bodies.

(3). Sediment must be removed from behind all sediment control measures when it has reached a height of 1/3 the barrier height, and prior to the control measures removal.

(4). Removal of trapped sediment in a sediment basin or sediment trap or catch basins must occur when the sediment retention capacity has been reduced by 50 percent; is not functioning properly and/or at the completion of project.

(5). Cleaning of all structures, inlet protection BMPs, and sump pumps must be completed regularly and as required to ensure structures and inlets function properly and flow freely.

(6). Construction site exits shall be maintained in a condition that will prevent tracking or flow of mud onto the ROW or approved access point. The entrance may require periodic top dressing as conditions demand, and repair and/or cleanout of any structures used to trap sediment. Wheel washing shall be required to prevent sediment and material tracking on road surfaces if passive BMPs are not effective.

(f) INSPECTION

(1). The EPSCP must be kept onsite at all times. All measures shown on the plan must be installed properly to ensure compliance with SRC and State and Regulatory permits, and that sediment does not enter a surface water system, roadway, or other properties.

(2). Written EPSC inspection logs shall be maintained onsite and available to City inspectors upon request.

(3). All BMPs shall be inspected at least every week. When a rainfall event exceeds 1/2–inch in a 24–hour period, daily inspection of the erosion controls, sediment controls, and discharge outfalls must be conducted and documented. Inspections shall be done by a representative of the permit registrant who is knowledgeable and experienced in the principles, practices, installation, and maintenance of erosion and sediment controls.

(g) INACTIVE CONSTRUCTION PERIODS AND POST–CONSTRUCTION

(1). Should work cease in any area for 14 days, the inactive area must be stabilized with appropriate soil stabilization BMPs. If all construction activity ceases the entire site must be temporarily stabilized using vegetation, heavy mulch layer, temporary seeding, or other method.

(2). All temporary erosion prevention and sediment control facilities shall be removed by the contractor within 30 days after permanent landscaping/vegetation is established and the threat of erosion and sediment transport has been mitigated.

(3). Temporary grass cover measures must be fully established by October 15 or other cover measures (i.e., erosion control blankets with anchors, one–inch of straw mulch, six mil HDPE plastic sheet, etc.) shall be in place over all disturbed soil areas until April 30. To establish an adequate grass stand for controlling erosion by October 15, it is recommended that seeding and mulching occur by September 1.

(4). Permanent erosion control vegetation on all embankments and disturbed areas shall be re–established as soon as construction is completed.

(h) SPECIFICATIONS

(1). Soil preparation. Topsoil should be prepared according to the landscape plans, if available, or recommendations of the grass seed supplier. Slopes shall be textured before seeding by rack walking (i.e., driving a crawling tractor up and down the slopes to leave a pattern of cleat imprints parallel to slope contours) or other method to provide stable areas for seeds to rest.

(2). Seeding. Erosion control grass seed mix shall be as follows: Dwarf grass mix (low height, low maintenance) consisting of dwarf perennial ryegrass (80 percent by weight), creeping red fescue (20 percent by weight). Application rate shall be 100 pounds per acre minimum.

(3). Grass seed shall be fertilized at a rate of ten pounds per 1,000 square feet with 16–16–16 slow release type fertilizer. Disturbed areas within 50 feet of water bodies and wetlands must use a non–phosphorous fertilizer.

(4). The application rate of fertilizers used to reestablish vegetation shall follow manufacturer's recommendations. Nutrient releases from fertilizers to surface waters shall be minimized. Time release fertilizers shall be used. Care shall be made in the application of fertilizers within any waterway riparian zone to prevent leaching into the waterway.

(5). When used, hydromulch shall be applied with grass seed at a rate of 2,000 pounds per acre between April 30 and June 10, or between September 1 and October 1. On slopes steeper than ten percent, hydroseed and mulch shall be applied with a bonding agent (tackifier). Application rate and methodology shall be in accordance with seed supplier recommendations.

(6). When used in lieu of hydromulch, dry, loose, weed–free straw used as mulch shall be applied at a rate of 4,000 pounds per acre (double the hydromulch application requirement). Anchor straw by working in by hand or with equipment (rollers, cleat trackers, etc.). Mulch shall be spread uniformly immediately following seeding.

(7). When conditions are not favorable to germination and establishment of the grass seed, the Contractor shall irrigate the seeded and mulched areas as required to establish the grass cover.

(8). Sediment fences shall be constructed of continuous filter fabric to avoid use of joints. When joints are necessary, filter cloth shall be spliced together only at a support post, with a minimum six–inch overlap, and both ends securely fastened to a post.

(9). The standard strength filter fabric shall be fastened securely to stitched loops installed on the upslope side of the posts, and six inches of the fabric shall be extended into the trench. The fabric shall not extend more than 30 inches above the original ground surface. Filter fabric shall not be stapled to existing trees.

(10). Bio–filter bags shall be clean 100 percent wood product waste. Bags shall be 18–inch x 18–inch x 30–inch, weigh approximately 45 pounds, and be contained in a bag made of 1/2–inch plastic mesh.

(11). Minimum wet weather slope protection. For 3H:1V or steeper slopes use Bon Terra Type C2 or North American Green Type C125 erosion control blankets. Use a minimum of two inches straw mulch or North American Green Type S150 for slopes flatter than 3H:1V and greater than 6H:1V. Slopes flatter than 6H:1V use one inch straw mulch, hydroseed with hydromulch and tackifier. Slope protection shall be placed on all disturbed areas immediately after completion of each section of construction activity, until the erosion control seeding has been established. As an option during temporary or seasonal work stoppages, a six–mil HDPE plastic sheet may be placed on exposed slopes. The plastic sheet shall be provided with an anchor trench at the top and bottom of the slope, and shall be sandbagged on the slopes as required to prevent damage or displacement by wind.

NO.	DATE	DESCRIPTION	BY
1		REVISIONS	

VERIFY SCALE
BAR IS ONE INCH ON ORIGINAL DRAWING
0 1"
IF NOT ONE INCH ON THIS SHEET, ADJUST SCALES ACCORDINGLY

DSGN. JW
DRN. AK
CKD. JW
DATE: 06/2022

REGISTERED PROFESSIONAL ENGINEER
OREGON
WILLIAM J. WELLS
REVIEW
RENEWS: 6/30/2024

WESTECH ENGINEERING, INC.
CONSULTING ENGINEERS AND PLANNERS
3841 Fairview Industrial Dr. S.E., Suite 100, Salem, OR 97302
Phone: (503) 585–2474 Fax: (503) 585–3986
E-mail: westech@westech-eng.com

CLUTCH INDUSTRIES
BLOSSOM APARTMENTS

EROSION CONTROL NOTES

DRAWING
C1.9

JOB NUMBER
3366.0000.0

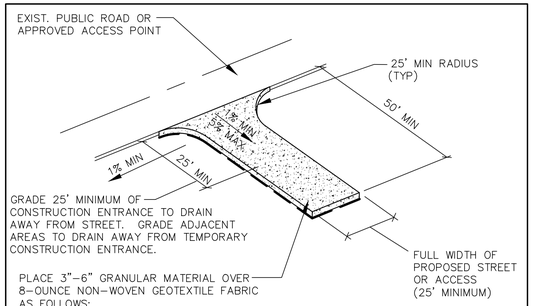

CONSTRUCTION NOTES:

1. THE AREA OF THE CONSTRUCTION ENTRANCE SHALL BE STRIPPED OF ALL TOPSOIL, VEGETATION, ROOTS, AND OTHER NON–COMPACTABLE MATERIAL.
2. SUBGRADE SHALL BE COMPACTED AND PROOFROLLED PRIOR TO PLACEMENT OF GRANULAR MATERIAL. FAILURE TO PASS PROOFROLL WILL REQUIRE USE OF WET WEATHER SECTION.
3. FAILURE OR PUMPING OF THE DRY WEATHER SECTION WILL REQUIRE REMOVAL OF THE GRANULAR MATERIAL AND INSTALLATION OF THE WET WEATHER SECTION.

MAINTENANCE NOTES:

1. THE ENTRANCE SHALL BE MAINTAINED IN A CONDITION THAT WILL PREVENT TRACKING OR FLOW OF SEDIMENT ONTO PUBLIC RIGHT–OF–WAY. THIS MAY REQUIRE PERIODIC TOP DRESSING WITH 3"–6" INCH STONE AS CONDITIONS DEMAND, AND REPAIR AND/OR CLEAN–OUT OF STRUCTURES USED TO TRAP SEDIMENT.
2. ALL MATERIALS SPILLED, DROPPED, WASHED OR TRACKED FROM VEHICLES ONTO ROADWAYS OR INTO STORM DRAINS MUST BE REMOVED IMMEDIATELY.
3. ALL TRUCKS TRANSPORTING SATURATED SOILS SHALL BE WELL SEALED. WATER DRIPPAGE FROM TRUCKS MUST BE REDUCED TO 1 GALLON PER HOUR PRIOR TO LEAVING THE SITE.

LAST REVISION DATE: MAY 2013	JO #: STANDARD
TEMPORARY CONSTRUCTION ENTRANCE (NTS)	
WESTECH ENG.	DETAIL NO. 6100

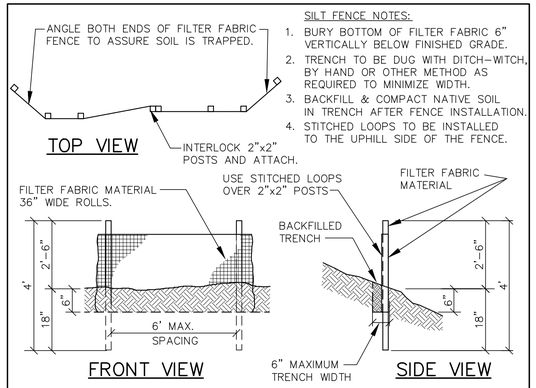

SILT FENCE NOTES:

1. BURY BOTTOM OF FILTER FABRIC 6" VERTICALLY BELOW FINISHED GRADE.
2. TRENCH TO BE DUG WITH DITCH–WITCH, BY HAND OR OTHER METHOD AS REQUIRED TO MINIMIZE WIDTH.
3. BACKFILL & COMPACT NATIVE SOIL IN TRENCH AFTER FENCE INSTALLATION.
4. STITCHED LOOPS TO BE INSTALLED TO THE UPHILL SIDE OF THE FENCE.

MAINTENANCE NOTES:

1. SEDIMENT BARRIERS SHALL BE MAINTAINED UNTIL UP–SLOPE AREA IS PERMANENTLY STABILIZED.
2. AT NO TIME SHALL MORE THAN ONE FOOT OF SEDIMENT BE ALLOWED TO ACCUMULATE BEHIND SEDIMENT FENCES OR BIOFILTER BAGS.
3. NEW SEDIMENT BARRIERS SHALL BE INSTALLED UPHILL AS REQUIRED TO CONTROL SEDIMENT TRANSPORT.

LAST REVISION DATE: APRIL 2014	JO #: STANDARD
SEDIMENT BARRIERS (NTS)	
WESTECH ENG.	DETAIL NO. 6110

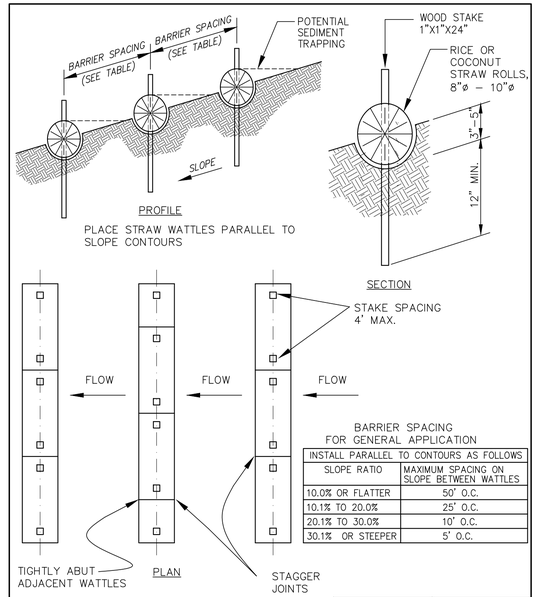

BARRIER SPACING FOR GENERAL APPLICATION

INSTALL PARALLEL TO CONTOURS AS FOLLOWS	
SLOPE RATIO	MAXIMUM SPACING ON SLOPE BETWEEN WATTLES
10.0% OR FLATTER	50' O.C.
10.1% TO 20.0%	25' O.C.
20.1% TO 30.0%	10' O.C.
30.1% OR STEEPER	5' O.C.

NOTES:

1. ALL MATERIAL SHALL CONFORM TO OSSC (ODOT/APWA) SPECIFICATIONS, CURRENT EDITION.
2. SEDIMENT BARRIERS SHALL BE MAINTAINED UNTIL UP–SLOPE AREA IS PERMANENTLY STABILIZED.
3. AT NO TIME SHALL SEDIMENT BE ALLOWED TO ACCUMULATE ABOVE THE TOP OF THE STRAW WATTLE.
4. NEW SEDIMENT BARRIERS SHALL BE INSTALLED UPHILL AS REQUIRED TO CONTROL SEDIMENT TRANSPORT.

LAST REVISION DATE: JUNE 2015	JO #: STANDARD
STRAW WATTLE SEDIMENT BARRIER (NTS)	
WESTECH ENG.	DETAIL NO. 6120

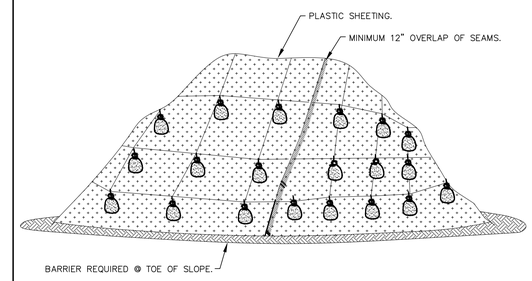

STOCKPILE DETAIL

NOTES:

1. MINIMUM 12" OVERLAP OF ALL SEAMS REQUIRED.
2. SEDIMENT BARRIER REQUIRED @ TOE OF STOCK PILE.
3. COVERING MAINTAINED TIGHTLY IN PLACE BY USING SANDBAGS OR TIRES ON ROPES WITH A MAXIMUM 10' GRID SPACING IN ALL DIRECTIONS.
4. PLASTIC SHEETING TO EXTEND A MINIMUM OF 12" PAST THE BOTTOM OF THE PILE ONTO SURROUNDING GRADE ON ALL SIDES.

LAST REVISION DATE: JAN 2019	JO #: STANDARD
STOCKPILE DETAIL (NTS)	
WESTECH ENG.	DETAIL NO. 6170

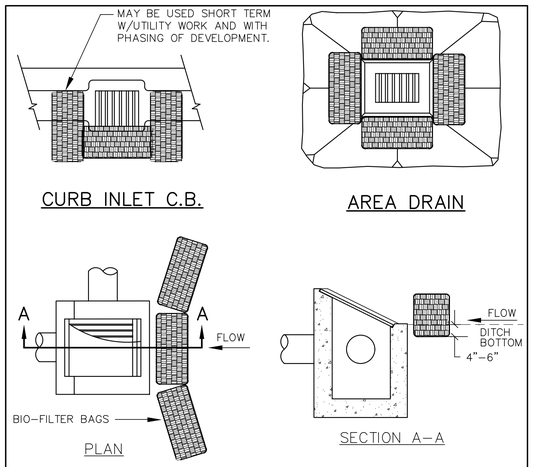

DITCH INLET C.B.

MAINTENANCE NOTES:

1. SEDIMENT BARRIERS SHALL BE MAINTAINED UNTIL UP–SLOPE AREA IS PERMANENTLY STABILIZED.
2. AT NO TIME SHALL MORE THAN ONE FOOT OF SEDIMENT BE ALLOWED TO ACCUMULATE BEHIND SEDIMENT FENCES OR BIOFILTER BAGS.
3. NEW SEDIMENT BARRIERS SHALL BE INSTALLED UPHILL AS REQUIRED TO CONTROL SEDIMENT TRANSPORT.

LAST REVISION DATE: APRIL 2014	JO #: STANDARD
INLET SEDIMENT CONTROL (NTS)	
WESTECH ENG.	DETAIL NO. 6130

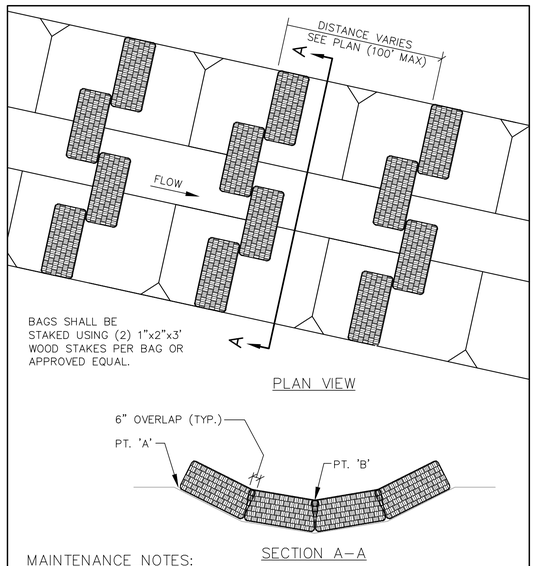

MAINTENANCE NOTES:

1. SEDIMENT BARRIERS SHALL BE MAINTAINED UNTIL UP–SLOPE AREA IS PERMANENTLY STABILIZED.
2. AT NO TIME SHALL MORE THAN ONE FOOT OF SEDIMENT BE ALLOWED TO ACCUMULATE BEHIND BIOFILTER BAGS.
3. NEW SEDIMENT BARRIERS SHALL BE INSTALLED UPHILL AS REQUIRED TO CONTROL SEDIMENT TRANSPORT.
4. PT. 'A' SHALL BE 6" MIN. HIGHER THAN PT. 'B'.

LAST REVISION DATE: APRIL 2014	JO #: STANDARD
DITCH AND SWALE EROSION PROTECTION (NTS)	
WESTECH ENG.	DETAIL NO. 6140

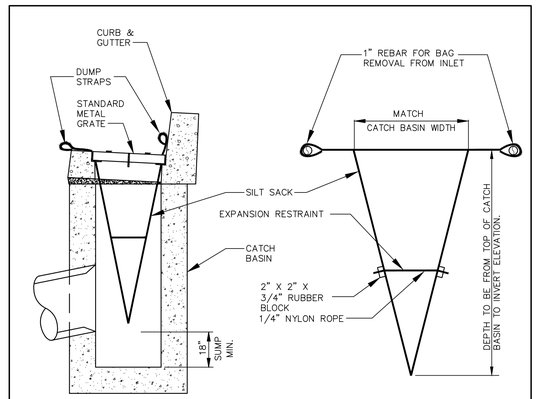

NOTES:

1. EMPTY SILT SACK AS NECESSARY.
2. SILTSACK SEDIMENT CONTROL DEVICE AS MANUFACTURED BY ACF ENVIRONMENTAL AND SUPPLIED BY ACF WEST (503) 771–5115 OR APPROVED EQUAL.

LAST REVISION DATE: OCT 2002	JO #: STANDARD
SILTSACK INLET DETAIL (NTS)	
WESTECH ENG.	DETAIL NO. 6150

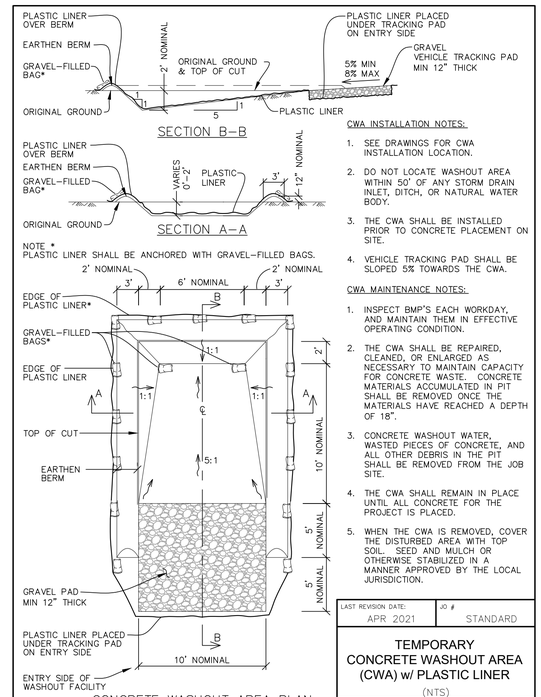

CWA INSTALLATION NOTES:

1. SEE DRAWINGS FOR CWA INSTALLATION LOCATION.
2. DO NOT LOCATE WASHOUT AREA WITHIN 50' OF ANY STORM DRAIN INLET, DITCH, OR NATURAL WATER BODY.
3. THE CWA SHALL BE INSTALLED PRIOR TO CONCRETE PLACEMENT ON SITE.
4. VEHICLE TRACKING PAD SHALL BE SLOPED 5% TOWARDS THE CWA.

CWA MAINTENANCE NOTES:

1. INSPECT BMP'S EACH WORKDAY, AND MAINTAIN THEM IN EFFECTIVE OPERATING CONDITION.
2. THE CWA SHALL BE REPAIRED, CLEANED, OR ENLARGED AS NECESSARY TO MAINTAIN CAPACITY FOR CONCRETE WASTE. CONCRETE MATERIALS ACCUMULATED IN PIT SHALL BE REMOVED ONCE THE MATERIALS HAVE REACHED A DEPTH OF 18".
3. CONCRETE WASHOUT WATER, WASTED PIECES OF CONCRETE, AND ALL OTHER DEBRIS IN THE PIT SHALL BE REMOVED FROM THE JOB SITE.
4. THE CWA SHALL REMAIN IN PLACE UNTIL ALL CONCRETE FOR THE PROJECT IS PLACED.
5. WHEN THE CWA IS REMOVED, COVER THE DISTURBED AREA WITH TOP SOIL. SEED AND MULCH OR OTHERWISE STABILIZED IN A MANNER APPROVED BY THE LOCAL JURISDICTION.

LAST REVISION DATE: APR 2021	JO #: STANDARD
TEMPORARY CONCRETE WASHOUT AREA (CWA) w/ PLASTIC LINER (NTS)	
WESTECH ENG.	DETAIL NO. WE6161

NO.	DATE	DESCRIPTION	BY
1		REVISIONS	

VERIFY SCALE
BAR IS ONE INCH ON ORIGINAL DRAWING
0 1"
IF NOT ONE INCH ON THIS SHEET, ADJUST SCALES ACCORDINGLY

DSGN. JW
DRN. AK
CKD. JW
DATE: 06/2022

REGISTERED PROFESSIONAL ENGINEER WILLIAM J. WELLS
REVIEW
RENEWS: 6/30/2024

WESTECH ENGINEERING, INC.
CONSULTING ENGINEERS AND PLANNERS
3841 Fairview Industrial Dr. S.E., Suite 100, Salem, OR 97302
Phone: (503) 585–2474 Fax: (503) 585–3986
E–mail: westech@westech–eng.com

CLUTCH INDUSTRIES
BLOSSOM APARTMENTS

EROSION CONTROL DETAILS

DRAWING
C1.10

JOB NUMBER
3366.0000.0

11/28/2022 6:49:55 AM
C:\Users\CAD\Desktop\Work (PC)\Projects\Clutch Industries\Blossom\Civil\Plots\C1.8, C1.10 – Erosion Control Notes & Details.dwg, (C1.10 tab)

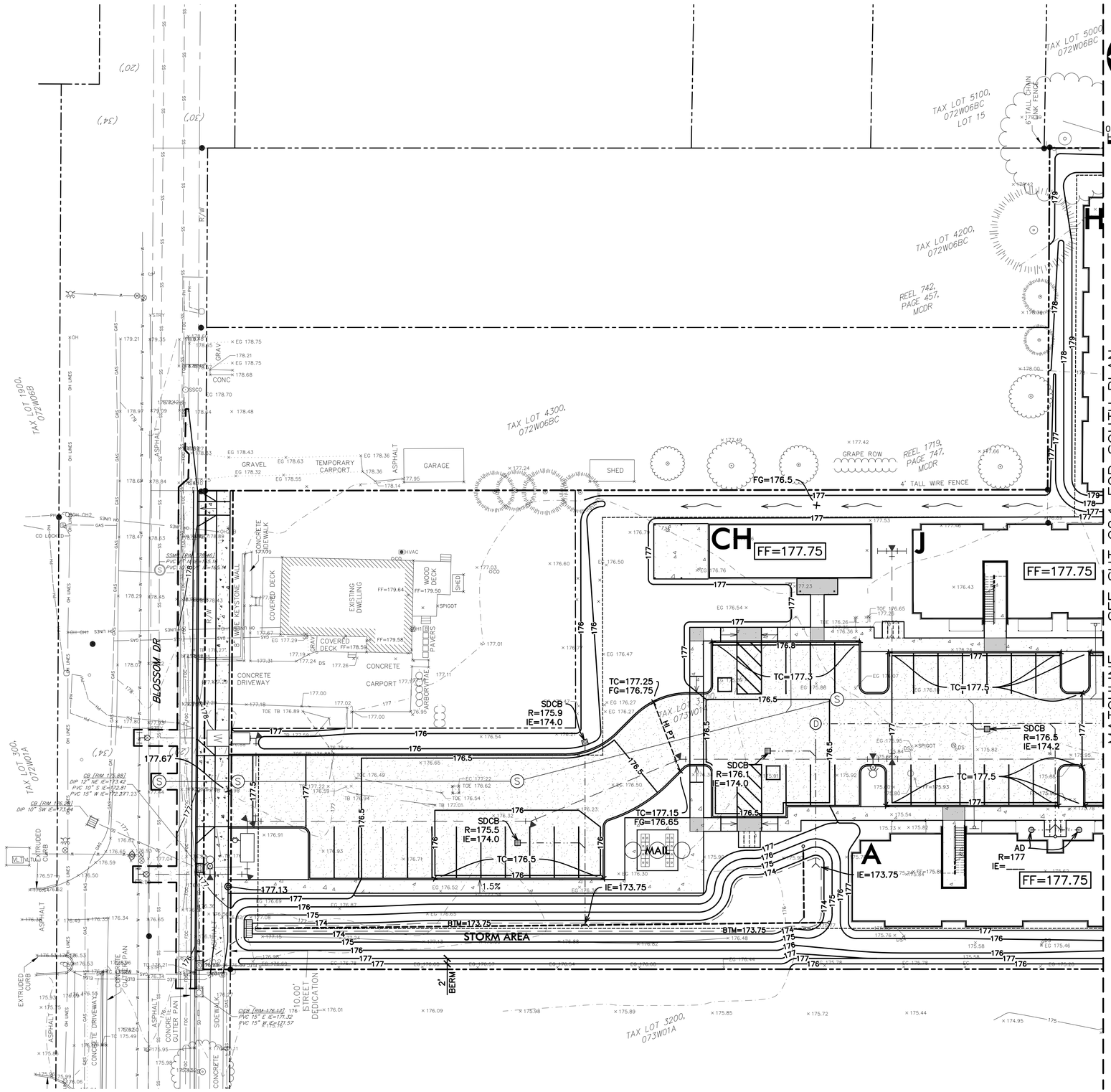

GRADING LEGEND

ADA LANDING
SLOPES NO GREATER THAN 1.5% IN ANY DIRECTION

ADA RAMP
8% MAX SLOPE

0 10 20 40
(feet)

NO.	DATE	DESCRIPTION	BY
1			

REVISIONS

VERIFY SCALE
BAR IS ONE INCH ON ORIGINAL DRAWING
0 1"
IF NOT ONE INCH, OR THIS SHEET, ADJUST SCALES ACCORDINGLY

DSGN. JW
DRN. AK
CKD. JW
DATE: 06/2022

REGISTERED PROFESSIONAL ENGINEER
WILLIAM J. WELLS
REVIEW
RENEWS: 6/30/2024

WESTECH ENGINEERING, INC.
CONSULTING ENGINEERS AND PLANNERS
3841 Fairview Industrial Dr. S.E., Suite 100, Salem, OR 97302
Phone: (503) 585-2474 Fax: (503) 585-3986
E-mail: westech@westech-eng.com

CLUTCH INDUSTRIES
BLOSSOM APARTMENTS

GRADING PLAN (N)

DRAWING
C2.0

JOB NUMBER
3366.0000.0

11/28/2022 6:50:08 AM
C:\Users\CAD\Desktop\Work (PC)\Projects\Clutch Industries\Blossom\Civil\Plots\C2.0 - Grading & Drainage Plan.dwg, (C2.0 tab)

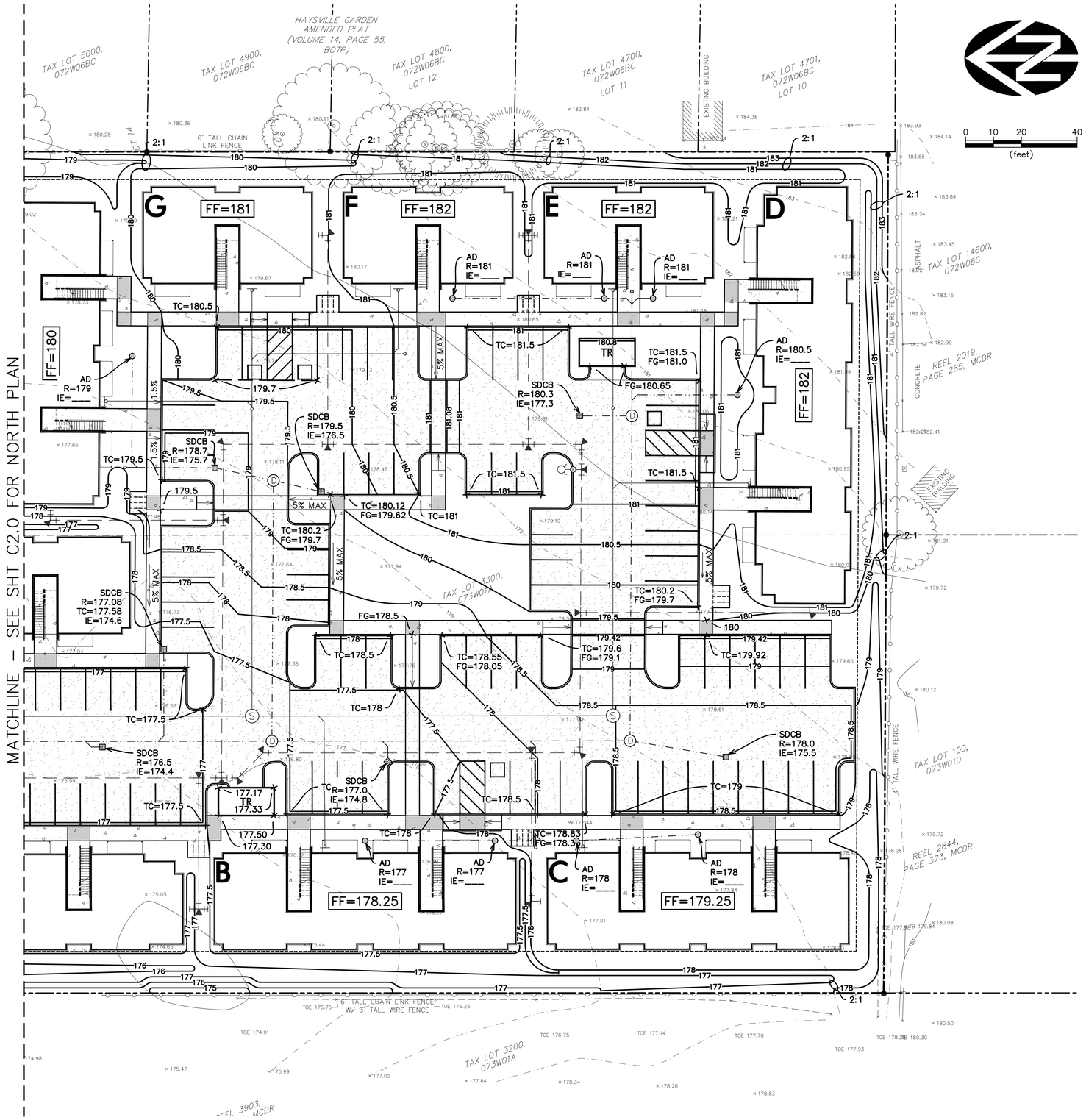

GRADING LEGEND

ADA LANDING
SLOPES NO GREATER THAN 1.5% IN ANY DIRECTION

ADA RAMP
8% MAX SLOPE

NO.	DATE	DESCRIPTION	BY
1			

REVISIONS

VERIFY SCALE
BAR IS ONE INCH ON ORIGINAL DRAWING
0 1"
IF NOT ONE INCH ON THIS SHEET, ADJUST SCALES ACCORDINGLY

DSN. JW
DRN. AK
CKD. JW
DATE: 06/2022

REVIEW
REGISTERED PROFESSIONAL ENGINEER
WILLIAM J. WELLS
RENEWS: 6/30/2024

WESTECH ENGINEERING, INC.
CONSULTING ENGINEERS AND PLANNERS
3841 Fairview Industrial Dr. S.E., Suite 100, Salem, OR 97302
Phone: (503) 585-2474 Fax: (503) 585-3986
E-mail: westech@westech-eng.com

CLUTCH INDUSTRIES
BLOSSOM APARTMENTS

GRADING PLAN (S)

DRAWING
C2.1

JOB NUMBER
3366.0000.0

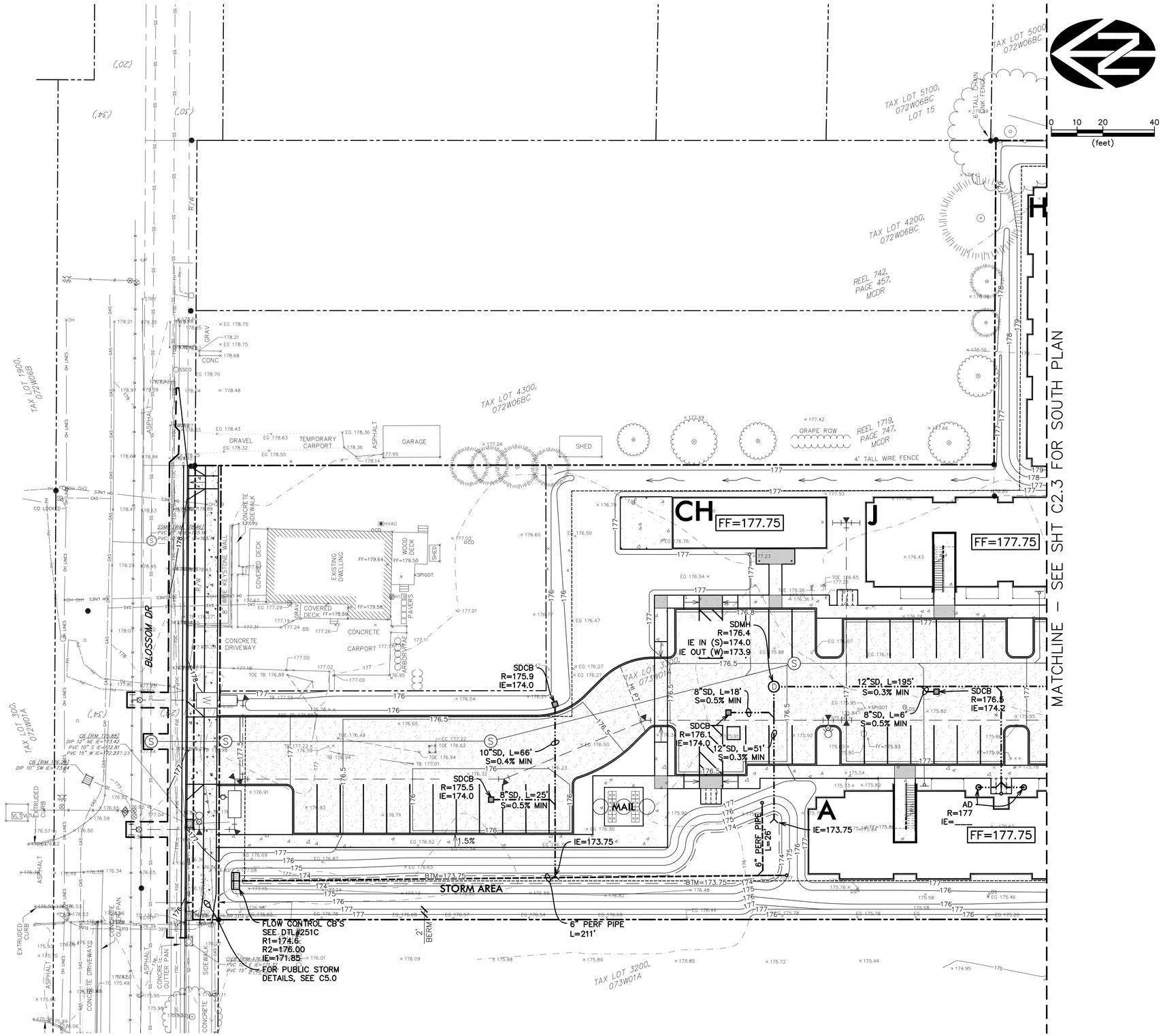

NO.	DATE	DESCRIPTION	BY
1			

REVISIONS

VERIFY SCALE
BAR IS ONE INCH ON ORIGINAL DRAWING
0 1"
IF NOT ONE INCH, OR THIS SHEET, ADJUST SCALES ACCORDINGLY

DSGN. JW
DRN. AK
CKD. JW
DATE: 06/2022

REGISTERED PROFESSIONAL ENGINEER
OREGON
WILLIAM J. WELLS

REVIEW

RENEWS: 6/30/2024

WESTECH ENGINEERING, INC.
CONSULTING ENGINEERS AND PLANNERS
3841 Fairview Industrial Dr. S.E., Suite 100, Salem, OR 97302
Phone: (503) 585-2474 Fax: (503) 585-3986
E-mail: westech@westech-eng.com

CLUTCH INDUSTRIES
BLOSSOM APARTMENTS

DRAINAGE PLAN (N)

DRAWING
C2.2

JOB NUMBER
3366.0000.0

11/28/2022 6:50:17 AM
C:\Users\CAD\Desktop\Work (PC)\Projects\Clutch Industries\Blossom\Civil\Plots\C2.0 - Grading & Drainage Plan.dwg, (C2.2 tab)

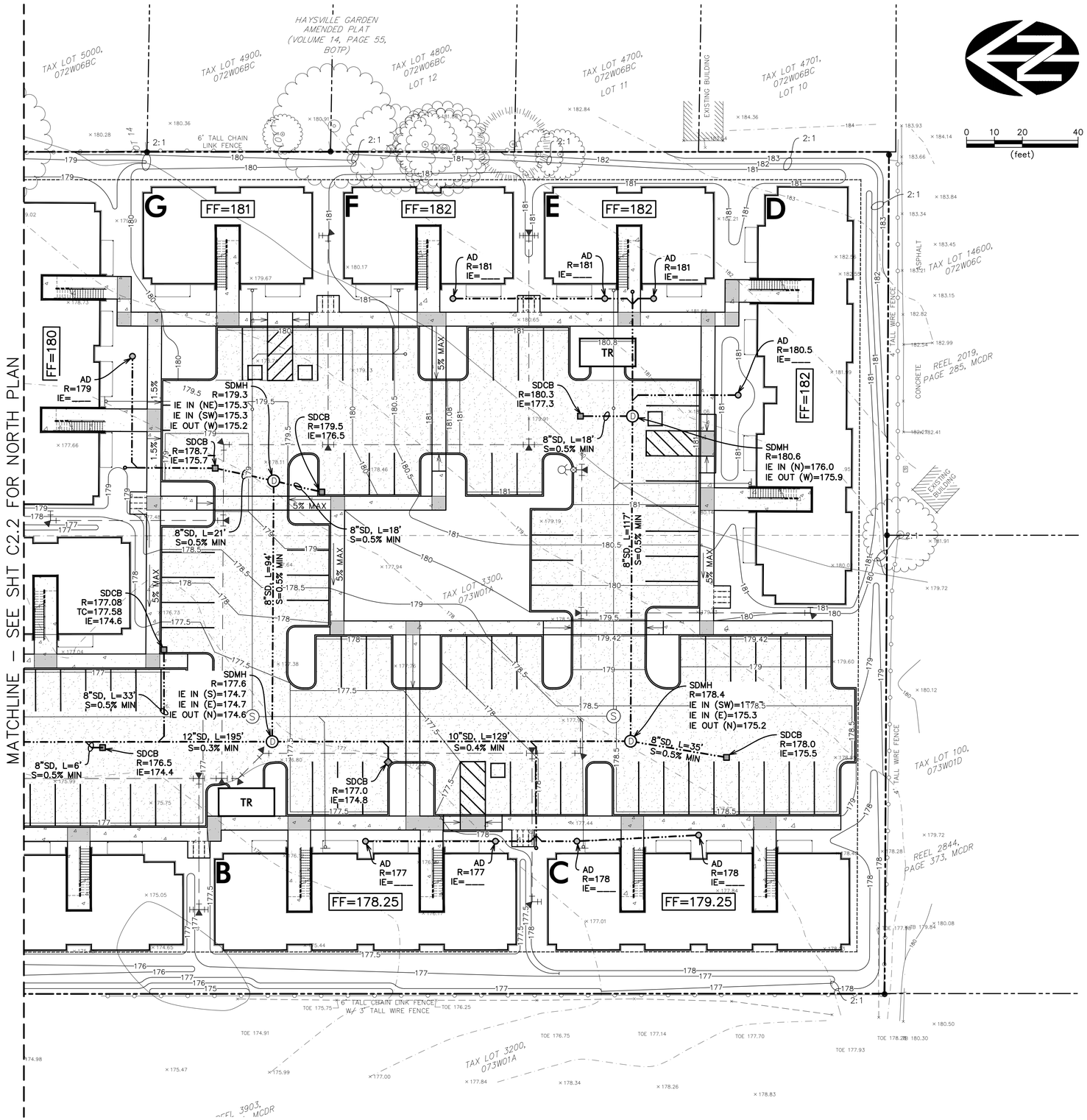

NO.	DATE	DESCRIPTION	BY
1			

REVISIONS

VERIFY SCALE
BAR IS ONE INCH ON ORIGINAL DRAWING
0 1"
IF NOT ONE INCH, OR THIS SHEET, ADJUST SCALES ACCORDINGLY

DSN. JW
DRN. AK
CKD. JW
DATE: 06/2022

REVIEW
REGISTERED PROFESSIONAL ENGINEER
WILLIAM J. WELLS
RENEWS: 6/30/2024

WESTECH ENGINEERING, INC.
CONSULTING ENGINEERS AND PLANNERS
3841 Fairview Industrial Dr. S.E., Suite 100, Salem, OR 97302
Phone: (503) 585-2474 Fax: (503) 585-3986
E-mail: westech@westech-eng.com

CLUTCH INDUSTRIES
BLOSSOM APARTMENTS

DRAINAGE PLAN (S)

DRAWING
C2.3

JOB NUMBER
3366.0000.0

11/28/2022 6:50:23 AM
C:\Users\CAD\Desktop\Work (PC)\Projects\Clutch Industries\Blossom\Civil\Plots\C2.0 - Grading & Drainage Plan.dwg, (C2.3 tab)

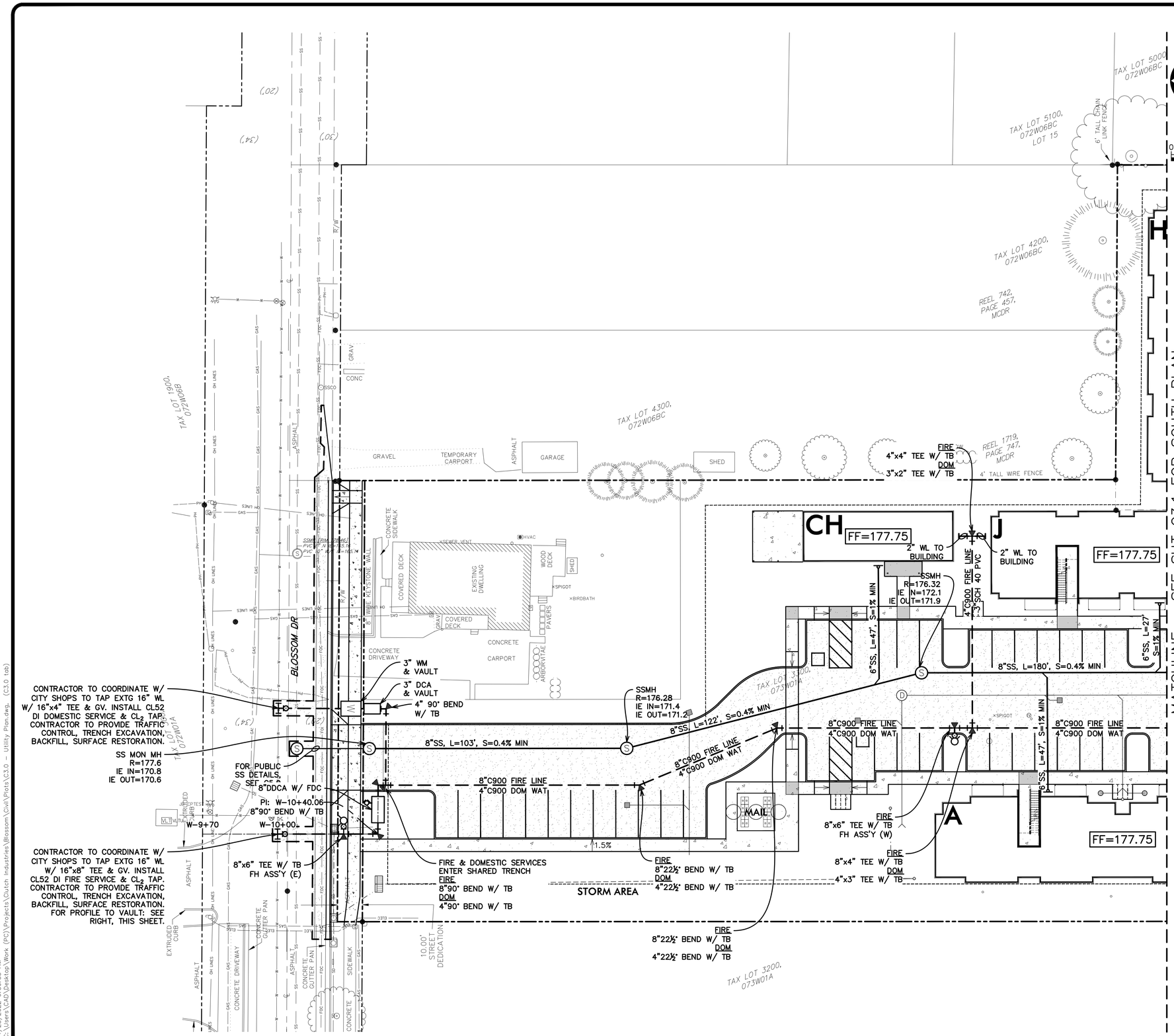

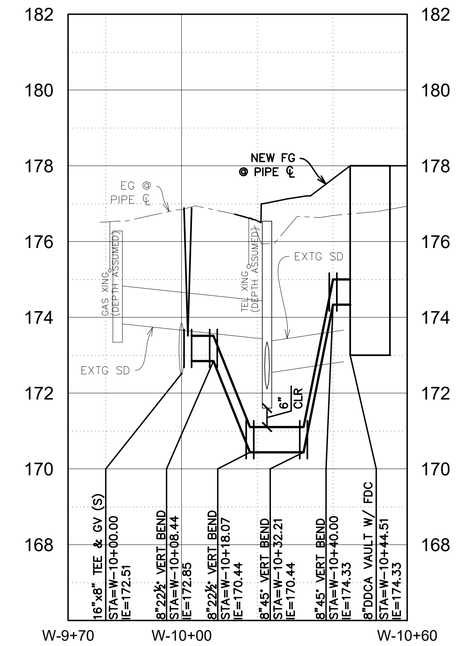

PUBLIC W/L PROFILE
VERT SCALE: 1"=2'

NO.	DATE	DESCRIPTION	BY
1			

REVISIONS

VERIFY SCALE
BAR IS ONE INCH ON ORIGINAL DRAWING
0 1"
IF NOT ONE INCH, ADJUST THIS SHEET, ADJUST SCALES ACCORDINGLY

DSGN. JW
DRN. AK
CKD. JW
DATE: 06/2022

REVIEW
REGISTERED PROFESSIONAL ENGINEER
WILLIAM J. WELLS
RENEWS: 6/30/2024

WESTECH ENGINEERING, INC.
CONSULTING ENGINEERS AND PLANNERS
3841 Fairview Industrial Dr. S.E., Suite 100, Salem, OR 97302
Phone: (503) 585-2474 Fax: (503) 585-3986
E-mail: westech@westech-eng.com

CLUTCH INDUSTRIES
BLOSSOM APARTMENTS

UTILITY PLAN (N)

DRAWING
C3.0

JOB NUMBER
3366.0000.0

11/28/2022 6:50:33 AM
C:\Users\CAD\Desktop\Work (PC)\Projects\Clutch Industries\Blossom\Civil\Plats\C3.0 - Utility Plan.dwg, (C3.0 tab)

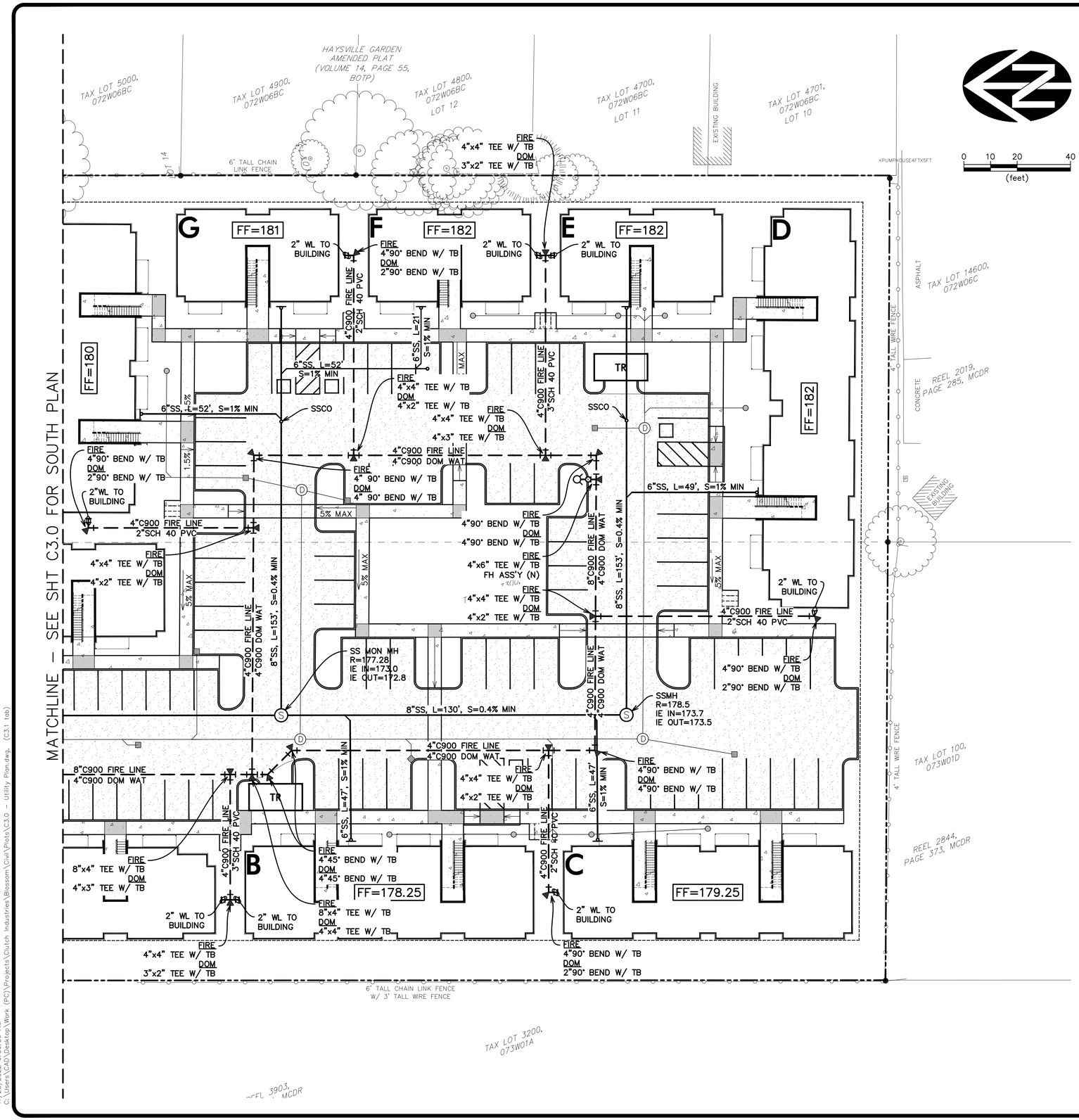

NO.	DATE	DESCRIPTION	BY
1			

REVISIONS

VERIFY SCALE
BAR IS ONE INCH ON ORIGINAL DRAWING
0 1"
IF NOT ONE INCH, OR THIS SHEET, ADJUST SCALES ACCORDINGLY

DSN. JW
DRN. AK
CKD. JW
DATE: 06/2022

REGISTERED PROFESSIONAL ENGINEER
WILLIAM J. WELLS
REVIEW
RENEWS: 6/30/2024

WESTECH ENGINEERING, INC.
CONSULTING ENGINEERS AND PLANNERS
3841 Fairview Industrial Dr. S.E., Suite 100, Salem, OR 97302
Phone: (503) 585-2474 Fax: (503) 585-3986
E-mail: westech@westech-eng.com

CLUTCH INDUSTRIES
BLOSSOM APARTMENTS

UTILITY PLAN (S)

DRAWING
C3.1

JOB NUMBER
3366.0000.0

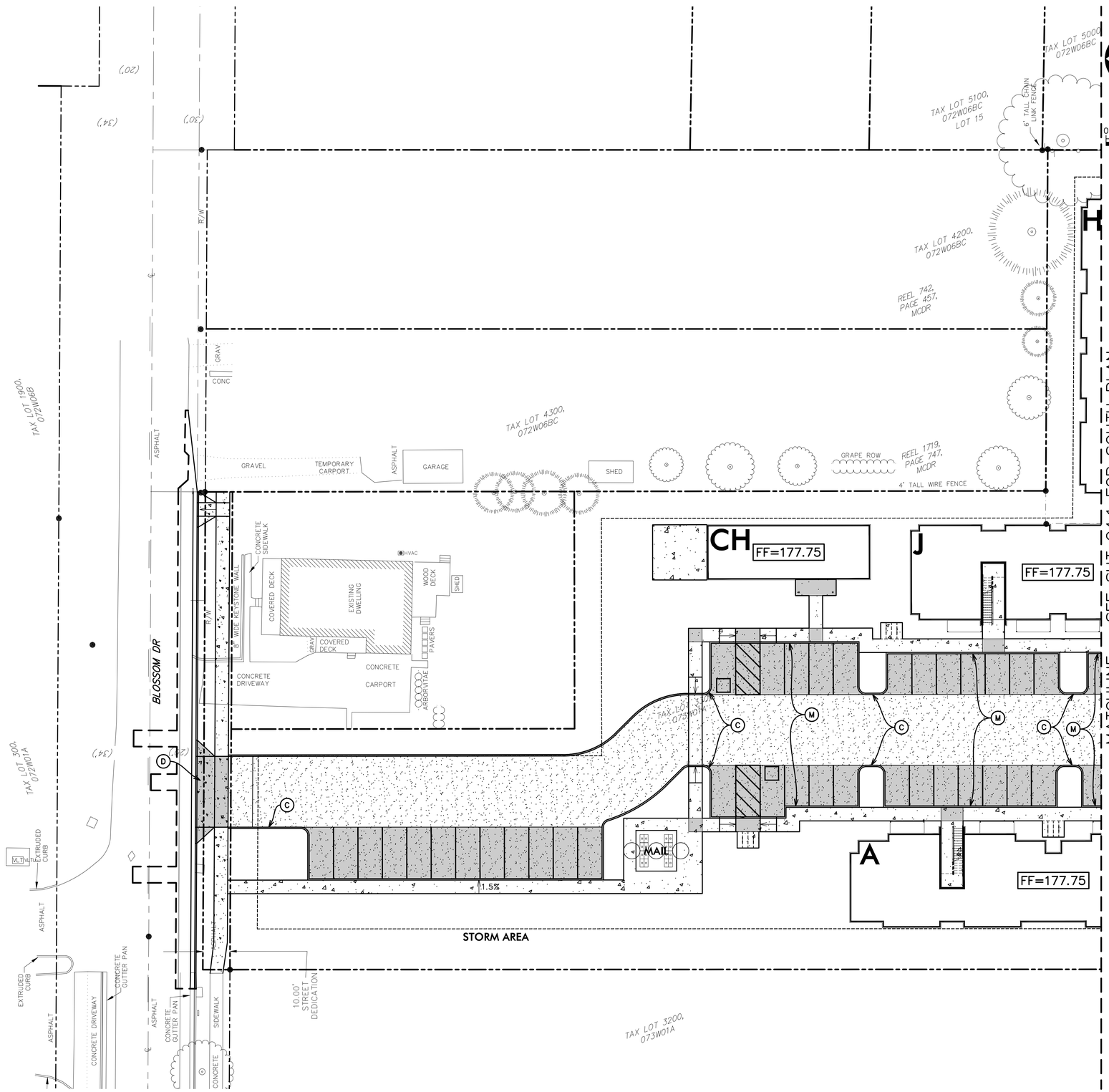

SURFACING LEGEND

- **HEAVY DUTY ASPHALT** — 3" OF LEVEL II HMAC OVER 9" OF COMPACTED 1"–0 OVER APPROVED SUBGRADE
- **LIGHT DUTY ASPHALT** — 3" OF LEVEL II HMAC OVER 6" OF COMPACTED 1"–0 OVER APPROVED SUBGRADE
- **PEDESTRIAN CONCRETE** — 4" PCC OVER 2" OF COMPACTED 1"–0 OVER APPROVED SUBGRADE
- **HEAVY DUTY CONCRETE** — 8" PCC OVER 4" OF COMPACTED 1"–0 OVER APPROVED SUBGRADE
- (C) TYPE 'C' CURB
- (D) NEW DRIVEWAY PER MARION COUNTY DTL #11B
- (M) MONOLITHIC CURB
- (W) WHEELSTOPS

NO.	DATE	DESCRIPTION	BY
1			

REVISIONS

VERIFY SCALE
BAR IS ONE INCH ON ORIGINAL DRAWING
0 1"
IF NOT ONE INCH, OF THIS SHEET, ADJUST SCALES ACCORDINGLY

DSN. JW
DRN. AK
CKD. JW
DATE: 06/2022

REVIEW
REGISTERED PROFESSIONAL ENGINEER
WILLIAM J. WELLS
REVIEWS: 6/30/2024

WESTECH ENGINEERING, INC.
CONSULTING ENGINEERS AND PLANNERS
3841 Fairview Industrial Dr. S.E., Suite 100, Salem, OR 97302
Phone: (503) 585-2474 Fax: (503) 585-3986
E-mail: westech@westech-eng.com

CLUTCH INDUSTRIES
BLOSSOM APARTMENTS

SURFACING PLAN (N)

DRAWING
C4.0

JOB NUMBER
3366.0000.0

11/28/2022 6:50:48 AM
C:\Users\CAD\Desktop\Work (PC)\Projects\Clutch Industries\Blossom\Civil\Plots\C4.0 – Surfacing Plan.dwg, (C4.0 tab)

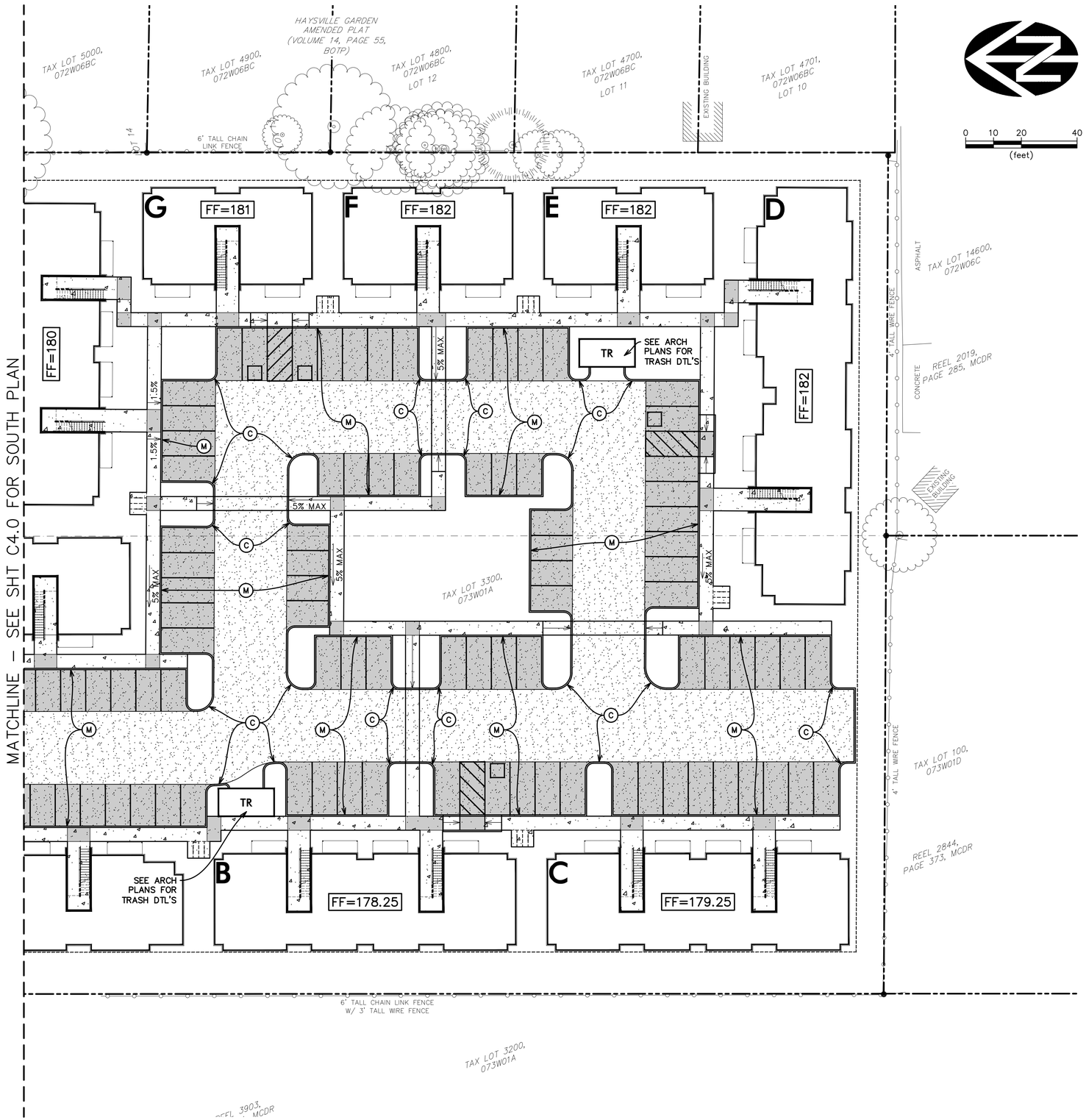

0 10 20 40
(feet)

SURFACING LEGEND

- HEAVY DUTY ASPHALT — 3" OF LEVEL II HMAC OVER 9" OF COMPACTED 1"–0 OVER APPROVED SUBGRADE
- LIGHT DUTY ASPHALT — 3" OF LEVEL II HMAC OVER 6" OF COMPACTED 1"–0 OVER APPROVED SUBGRADE
- PEDESTRIAN CONCRETE — 4" PCC OVER 2" OF COMPACTED 1"–0 OVER APPROVED SUBGRADE
- HEAVY DUTY CONCRETE — 8" PCC OVER 4" OF COMPACTED 1"–0 OVER APPROVED SUBGRADE
- (C) TYPE 'C' CURB
- (D) NEW DRIVEWAY PER MARION COUNTY DTL #11B
- (M) MONOLITHIC CURB
- (W) WHEELSTOPS

NO.	DATE	DESCRIPTION	BY
1			

REVISIONS

VERIFY SCALE
BAR IS ONE INCH ON ORIGINAL DRAWING
0 1"
IF NOT ONE INCH, OR THIS SHEET, ADJUST SCALES ACCORDINGLY

DSN. JW
DRN. AK
CKD. JW
DATE: 06/2022

REGISTERED PROFESSIONAL ENGINEER
WILLIAM J. WELLS
REVIEW
RENEWS: 6/30/2024

WESTECH ENGINEERING, INC.
CONSULTING ENGINEERS AND PLANNERS
3841 Fairview Industrial Dr. S.E., Suite 100, Salem, OR 97302
Phone: (503) 585–2474 Fax: (503) 585–3986
E-mail: westech@westech-eng.com

CLUTCH INDUSTRIES
BLOSSOM APARTMENTS

SURFACING PLAN (S)

DRAWING
C4.1

JOB NUMBER
3366.0000.0

11/28/2022 6:50:52 AM
C:\Users\CAD\Desktop\Work (PC)\Projects\Clutch Industries\Blossom\Civil\Plats\C4.0 – Surfacing Plan.dwg, (C4.1 tab)

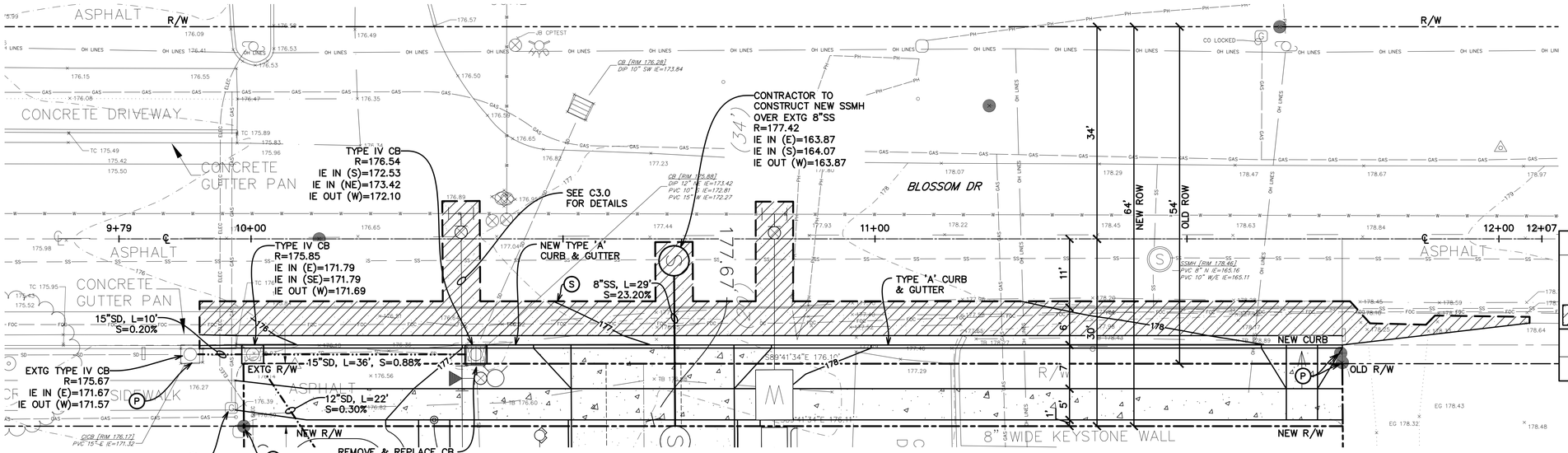

BLOSSOM DR PLAN

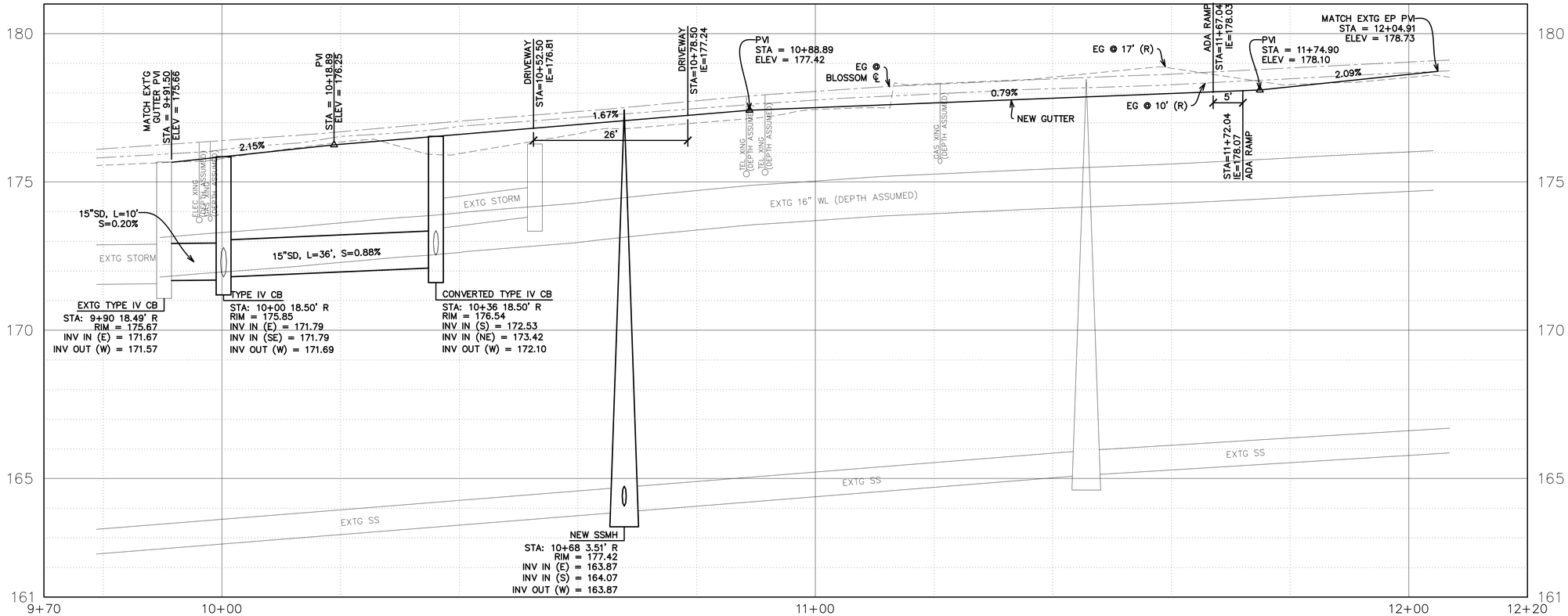

BLOSSOM DR PROFILE

SCALE – V:1"=2'

0 5 10 20 (feet)

DEMOLITION LEGEND

- (P) PROTECT
- (S) SAWCUT
- NEW AC SEE TYPICAL SECTION

NOTES

1. SEE SHT C5.1 FOR CROSS-SECTIONS & SHT C5.2 FOR TYPICAL SECTION.

NO.	DATE	DESCRIPTION	BY
1		REVISIONS	

VERIFY SCALE
BAR IS ONE INCH ON ORIGINAL DRAWING
0 1"
IF NOT ONE INCH ON THIS SHEET, ADJUST SCALES ACCORDINGLY

DSN. JW
DRN. AK
CKD. JW
DATE: 07/2022

REGISTERED PROFESSIONAL ENGINEER
WILLIAM J. WELLS
REVIEW
RENEWS: 6/30/2024

WESTECH ENGINEERING, INC.
CONSULTING ENGINEERS AND PLANNERS
3841 Fairview Industrial Dr. S.E., Suite 100, Salem, OR 97302
Phone: (503) 585-2474 Fax: (503) 585-3986
E-mail: westech@westech-eng.com

CLUTCH INDUSTRIES
BLOSSOM APARTMENTS

BLOSSOM DR GUTTER PLAN & PROFILE

DRAWING
C5.0

JOB NUMBER
3366.0000.0

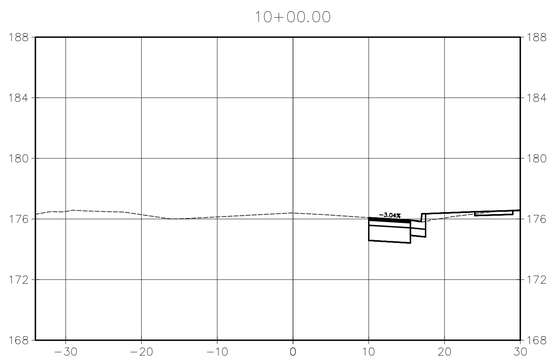

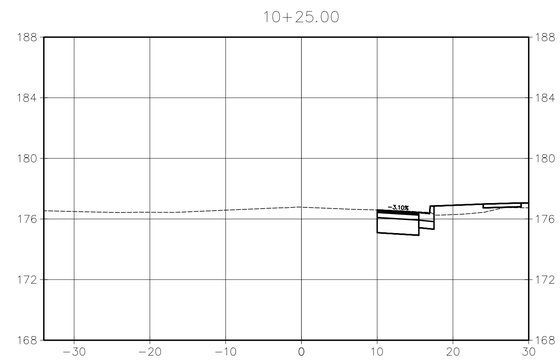

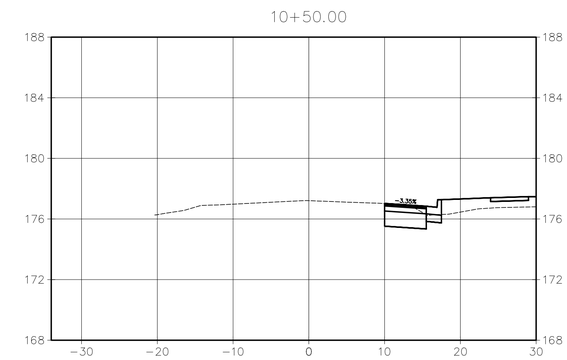

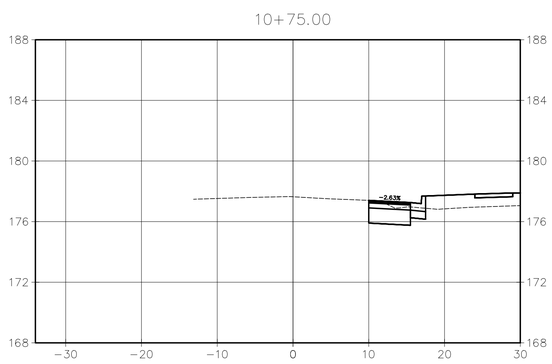

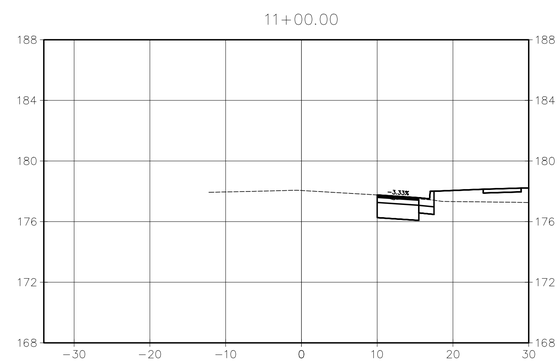

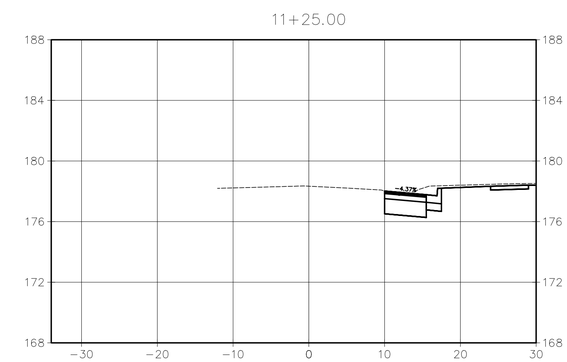

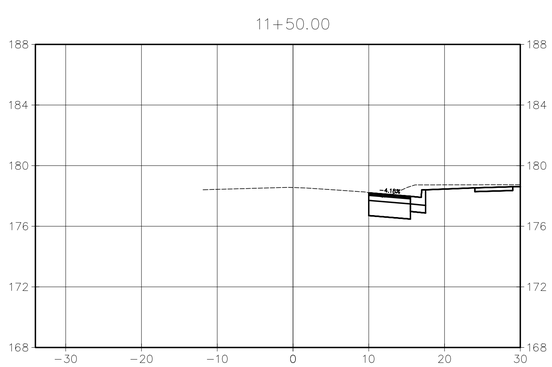

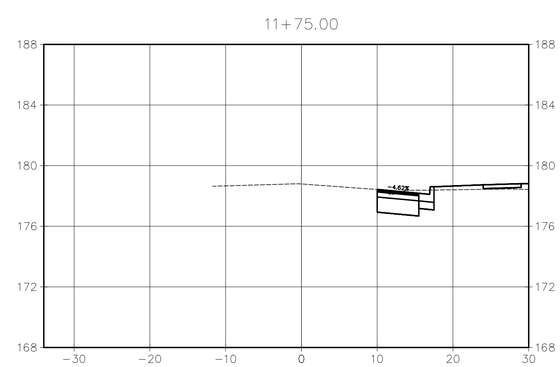

BLOSSOM DR CROSS-SECTIONS

SCALE – H:1"=10' V:1"=5'

VERIFY SCALE
BAR IS ONE INCH ON ORIGINAL DRAWING
0 1"
IF NOT ONE INCH ON THIS SHEET, ADJUST SCALES ACCORDINGLY

NO.	DATE	DESCRIPTION	BY
1			

REVISIONS

DSGN. JW
DRN. AK
CKD. JW
DATE: 07/2022

REGISTERED PROFESSIONAL ENGINEER
WILLIAM J. WELLS
OREGON
REVIEW
RENEWS: 6/30/2024

WESTECH ENGINEERING, INC.
CONSULTING ENGINEERS AND PLANNERS
3841 Fairview Industrial Dr. S.E., Suite 100, Salem, OR 97302
Phone: (503) 585-2474 Fax: (503) 585-3986
E-mail: westech@westech-eng.com

CLUTCH INDUSTRIES
BLOSSOM APARTMENTS

BLOSSOM DR CROSS-SECTIONS

DRAWING
C5.1

JOB NUMBER
3366.0000.0

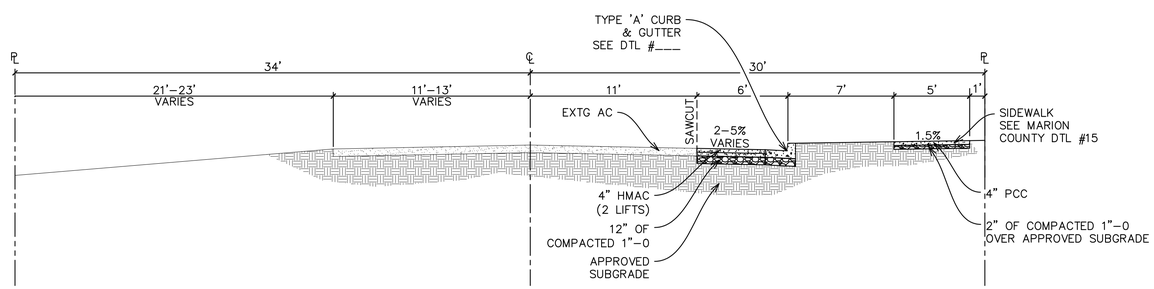

BLOSSOM DR TYPICAL SECTION

NTS

VERIFY SCALE

BAR IS ONE INCH ON ORIGINAL DRAWING

0 1"

IF NOT ONE INCH ON THIS SHEET, ADJUST SCALES ACCORDINGLY

DSGN.	JW
DRN.	AK
CKD.	JW
DATE:	07/2022

NO.	DATE	DESCRIPTION	BY
1			

REVISIONS

REVIEW

REGISTERED PROFESSIONAL ENGINEER
WILLIAM J. WELLS
RENEWS: 6/30/2024

WESTECH ENGINEERING, INC.
CONSULTING ENGINEERS AND PLANNERS
3841 Fairview Industrial Dr. S.E., Suite 100, Salem, OR 97302
Phone: (503) 585-2474 Fax: (503) 585-3986
E-mail: westech@westech-eng.com

CLUTCH INDUSTRIES

BLOSSOM APARTMENTS

BLOSSOM DR TYPICAL SECTION

DRAWING

C5.2

JOB NUMBER

3366.0000.0

11/28/2022 6:51:16 AM
C:\Users\CAD\Desktop\Work (PC)\Projects\Clutch Industries\Blossom\Civil\Plots\C5.0 - Blossom Gutter Plan & Profile.dwg, (C5.2 tab)

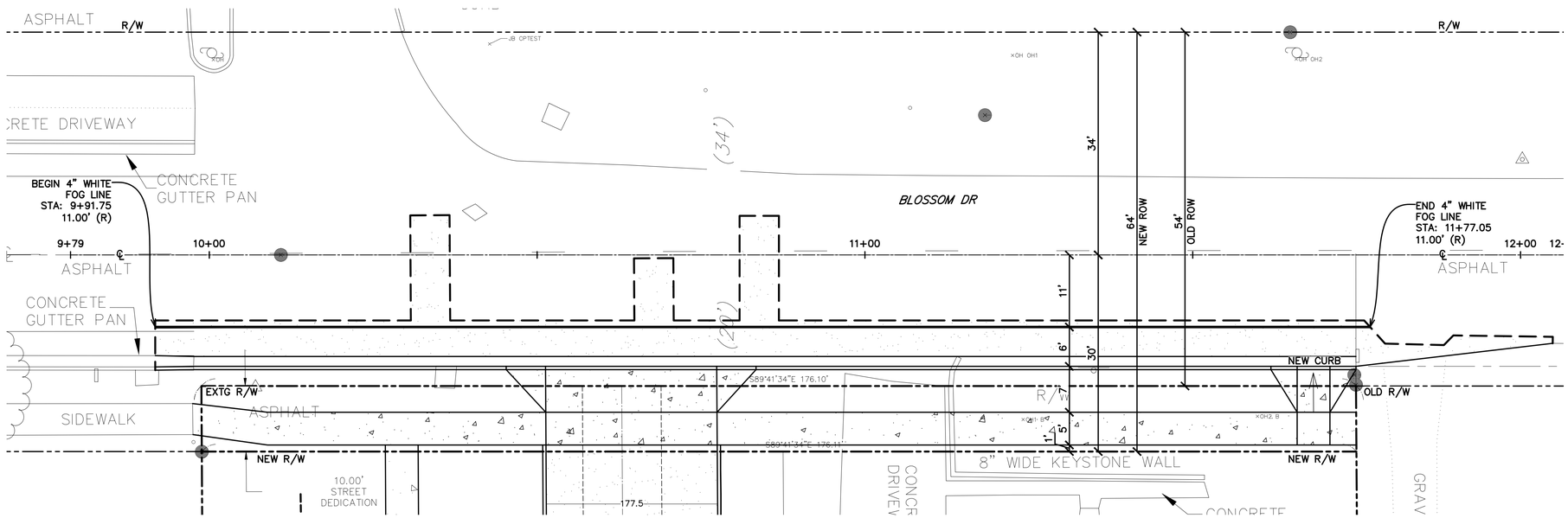

BLOSSOM DR STRIPING PLAN

0 5 10 20
(feet)

NO.	DATE	DESCRIPTION	BY
1			

REVISIONS

VERIFY SCALE
BAR IS ONE INCH ON ORIGINAL DRAWING
0 1"
IF NOT ONE INCH ON THIS SHEET, ADJUST SCALES ACCORDINGLY

DSGN. JW
DRN. AK
CKD. JW
DATE: 10/2022

REVIEW
REGISTERED PROFESSIONAL ENGINEER
WILLIAM J. WELLS
RENEWS: 6/30/2024

WESTECH ENGINEERING, INC.
CONSULTING ENGINEERS AND PLANNERS
3841 Fairview Industrial Dr. S.E., Suite 100, Salem, OR 97302
Phone: (503) 585-2474 Fax: (503) 585-3986
E-mail: westech@westech-eng.com

CLUTCH INDUSTRIES
BLOSSOM APARTMENTS

BLOSSOM DR STRIPING PLAN

DRAWING
C5.3

JOB NUMBER
3366.0000.0

GENERAL NOTES

1. Contractor shall procure, and conform to all construction permits required by the City of Salem and Marion County. Contractor shall coordinate and pay all fees and costs associated with connecting to existing water, sanitary sewer and storm sewer facilities, including services and inspections by the Approving Agency.

2. Owner to pay all project permit costs, including but not limited to utility tapping, TV, and chlorination costs. The Contractor shall coordinate with the Approving Agency to determine appropriate fees and provide the Owner with 48 hours notice prior to the required payment of fees or costs.

3. Oregon law requires the Contractor to follow rules adopted by the Oregon Utility Notification Center. Those rules are set forth in OAR 952-001-0010 through OAR 952-001-0090. Obtain copies of the rules by calling the center. (Note: the telephone number for the Oregon Utility Notification Center is 503-232-1987).

4. Contractor to notify City, County and all utility companies a minimum of 48 business hours (2 business days) prior to start of construction, and comply with all other notification requirements of the Approving Agency with jurisdiction over the work.

5. Contractor shall provide all bonds and insurance required by public and/or private agencies having jurisdiction. Where required by public and/or private agencies having jurisdiction, the Contractor shall submit a suitable maintenance bond prior to final payment.

6. All materials and workmanship for facilities in street right-of-way or easements shall conform to Approving Agencies' construction specifications wherein each has jurisdiction, including but not limited to the City, County, Oregon Health Division (OHD) and the Oregon Department of Environmental Quality (DEQ).

7. Unless otherwise approved by the Public Works Director, construction of all public facilities shall be done between 7:00 a.m. and 6:00 p.m., Monday through Saturday.

8. The Contractor shall perform all work necessary to complete the project in accordance with the approved construction drawings including such incidentals as may be necessary to meet the Approving Agencies' requirements and provide a completed project.

9. Any inspection by the City, County or other Approving Agency shall not, in any way, relieve the Contractor from any obligation to perform the work in strict compliance with the contract documents, applicable codes, and Approving Agency requirements.

10. Contractor shall maintain one complete set of approved drawings on the construction site at all times whereon he will record all approved deviations in construction from the approved drawings, as well as the station locations and depths of all existing utilities encountered. These field record drawings shall be kept up to date at all times and shall be available for inspection by the Approving Agency or Owner's Representative upon request. Failure to conform to this requirement may result in delay in payment and/or final acceptance of the project.

11. Upon completion of construction of all new facilities, Contractor shall submit a clean set of field record drawings containing all as-built information to the Engineer. All information shown on the Contractor's field record drawings shall be subject to verification. If significant errors or deviations are noted, an as-built survey prepared and stamped by a registered professional Land Surveyor shall be completed at the Contractor's expense.

12. Contractor shall procure and conform to DEQ stormwater permit No. 1200C for construction activities where 1 acre or more are disturbed.

13. 1200-C Erosion Control Permit & Inspection Responsibilities: After contract award and prior to starting construction, the Contractor shall formally transfer to themself the 1200-C permit and responsibility for erosion control inspection under the permit and notify DEQ. No work shall be performed onsite until the permit has been transferred and DEQ has been notified of the change in inspector responsibility.

14. The contractor shall retain and pay for the services of a registered Civil Engineer and/or Land Surveyor licensed in the State of Oregon to establish construction control and perform initial construction surveys to establish the lines and grades of improvements as indicated on the drawings. Staking for buildings, structures, curbs, gravity drainage piped structures and other critical improvements shall be completed using equipment accurate to 0.04 feet horizontally and 0.02 feet vertically, or better. Use of GPS equipment for final construction staking of these critical improvements is prohibited. The registered professional surveyor shall provide the design engineer with copies of all grade sheets for construction staking performed for the project.

15. See architectural drawings for site lighting, site dimensioning, and continuation of all utilities.

TRAFFIC CONTROL

16. Contractor shall erect and maintain barricades, warning signs, traffic cones (and all other traffic control devices required) per City and County requirements in accordance with the current MUTCD (including Oregon amendments). Access to driveways shall be maintained at all times. All traffic control measures shall be approved and in place prior to any construction activity. Prior to any work in the existing public right-of-way, contractor shall submit a final traffic control plan to the Approving Agency for review and issuance of a Lane Closure or Work in Right-of-Way Permit.

17. Prior to any work in the existing right-of-way, Contractor shall submit final traffic control plan to Marion County for review and issuance of lane closure permit. Contractor to obtain a lane closure permit before construction starts for any work within the existing public right-of-way, including public street improvements or driveway connections to existing streets.

TESTING AND INSPECTION:

18. For public and private improvements, the Contractor shall be responsible to ensure that all required or necessary inspections are completed by authorized inspectors prior to proceeding with subsequent work which covers or that is dependent on the work to be inspected. Failure to obtain necessary inspection(s) and approval(s) shall result in the Contractor being fully responsible for all problems and/or corrective measures arising from uninspected work.

19. Unless otherwise specified, the attached "Required Testing and Frequency" table outlines the minimum testing schedule for private improvements on the project. This testing schedule is not complete, and does not relieve the Contractor of the responsibility of obtaining all necessary inspections or observations for all work performed, regardless of who is responsible for payment. Cost for retesting shall be borne by the Contractor.

EXISTING UTILITIES & FACILITIES:

20. The location and descriptions of existing utilities shown on the drawings are compiled from available records and/or field surveys. The Engineer or utility companies do not guarantee the accuracy or the completeness of such records. Contractor shall field verify locations and sizes of all existing utilities prior to construction.

21. Utility locations are based on record information and should be field-verified. Call 1-800-332-2344 at least 48 hours prior to construction for on-site locating of utilities.

22. Contractor shall field verify location and depth of all existing utilities where new facilities cross. All utility crossings marked or shown on the drawings shall be potholed using hand tools or other non-invasive methods prior to excavating or boring. Contractor shall be responsible for exposing potential utility conflicts far enough ahead of construction to make necessary grade or alignment modifications without delaying the work. If grade or alignment modification is necessary, Contractor shall notify the Design Engineer, and the Design Engineer or the Owner's Representative shall obtain approval from the Approving Agency prior to construction.

23. The Contractor shall be responsible for locating and marking all existing survey monuments of record (including but not limited to property and street monuments) prior to construction. If any survey monuments are removed, disturbed or destroyed during construction of the project, the Contractor shall retain and pay for the services of a Registered Professional Surveyor licensed in the State of Oregon to reference and replace all such monuments prior to final payment. The monuments shall be replaced within a maximum of 90 days, and the County Surveyor shall be notified in writing as required by per ORS 209.150.

24. All facilities shall be maintained in-place by the Contractor unless otherwise shown or directed. Contractor shall take all precautions necessary to support, maintain, or otherwise protect existing utilities and other facilities at all times during construction. Contractor to leave existing facilities in an equal or better-than-original condition and to the satisfaction of the Approving Agency and Owner's Representative.

25. Utilities or interfering portions of utilities that are abandoned in place shall be removed by the Contractor to the extent necessary to accomplish the work. The Contractor shall plug the remaining exposed ends of abandoned utilities after appropriate verification procedures have taken place.

26. Contractor shall remove all existing signs, mailboxes, fences, landscaping, etc., as required to avoid damage during construction and replace them to existing or better condition.

27. Unless otherwise approved by the Approving Agency, all field tiles or drain lines intercepted or exposed during construction shall be connected to new storm lines, unless they are removed completely during construction, or are located and plugged at 50 foot maximum intervals uphill of the location intercepted. Any abandoned drain tiles downstream of the intercepting trenches shall be plugged with grout.

28. Any septic tanks encountered during construction shall be pumped out. Contractor shall break bottom of tank out and backfill with pea gravel unless otherwise required by public agencies having jurisdiction. Septic tank removal to be in accordance with County Sanitarian requirements.

29. Any wells encountered shall be abandoned per State of Oregon Water Resources Department requirements.

30. The Contractor shall be responsible for managing construction activities to ensure that public streets and right-of-ways are kept clean of mud, dust or debris. Dust abatement shall be maintained by adequate watering of the site by the Contractor.

GRADING, PAVING & DRAINAGE:

31. Contractor to review soils report prepared by GeoEngineers dated July 28, 2020, and conform to all recommendations listed in the report.

32. All materials and workmanship for compaction, fills, grading, rocking and paving within the public right-of-way shall conform to Marion County Standard Construction Specifications.

33. Unless otherwise noted, all grading, rocking and paving to conform to Oregon Standard Specifications for Construction (OSSC/ODOT/APWA), 2021 edition.

34. Clear and grub within work limits all surface vegetation, trees, stumps, brush, roots, etc. Do not damage or remove trees except as approved by the Owner's Representative or as shown on the drawings. Protect all roots two inches in diameter or larger.

35. Strip work limits, removing all organic matter, which cannot be compacted into a stable mass. All trees, brush, and debris associated with clearing, stripping or grading shall be removed and disposed of off-site.

36. Except as otherwise allowed by the specifications drawing details or notes, immediately following stripping and grading operations, compact subgrade to 92% of the maximum dry density per AASHTO T-180 test method (Modified Proctor). Subgrade must be inspected and approved by the Owner's authorized representative before placing, engineered fills or fine grading for base rock.

37. Engineered fills shall be constructed and compacted in 6" lifts over approved subgrade. All fills shall be engineered and comply with the Oregon Structural Specialty Code, with each lift compacted to 92% of the maximum dry density per AASHTO T-180 test method (Modified Proctor).

38. Granular baserock shall conform to the requirements of OSSC (ODOT/APWA) 02630.10 (Dense Graded Base Aggregate), with no more than 10% passing the #40 sieve and no more than 5% passing the #200 sieve.

39. Compact granular baserock to 92% of the maximum dry density per AASHTO T-180 test method (Modified Proctor). Written baserock compaction test results from an independent testing laboratory must be received by the Owner's authorized representative before placing AC pavement, and a finished rock grade proof-roll (witnessed by the Owners authorized representative) must be performed.

40. A.C. pavement shall conform to OSSC (ODOT/APWA) 00745 (Hot Mixed Asphalt Concrete Pavement) for standard duty mix. Unless otherwise specified or shown on the drawings, base lifts shall be 3/4" dense graded mix, while wearing courses shall be 1/2" dense graded mix. Unless otherwise specified or shown on the drawings, A.C. pavement for parking lots and streets shall be Level 2 mix (50 blow Marshall) per OSSC (ODOT/APWA) 00744.13. A.C. Pavement shall be compacted to a minimum of 91% of maximum density as determined by the Rice standard method. Written AC pavement compaction test results from an independent testing laboratory must be received by the Owner's authorized representative before final payment.

41. Pavement surface shall be a smooth, well-sealed, tight mat without depressions or bird baths. Bony or open graded pavement surfaces shall be repaired to the satisfaction of the Owner's authorized representative, prior to final acceptance of the work.

42. HMAC mixtures shall be placed only when the surface is dry and weather conditions are such that proper handling, finishing and compaction can be accomplished. In no case shall bituminous mixtures be placed when the surface temperature is below the minimum established under 2021 OSSC (ODOT/APWA) 00744.40 (AC - Season and Temperature Limitations) or the project specifications, whichever is more stringent.

43. Contractor shall protect new pavement against traffic as required, until it has cooled sufficiently to avoid tracking.

44. Unless otherwise shown on the drawings or details, straight grades shall be run between all finish grade elevations and/or finish contour lines shown (exception: where grades are shown across sidewalks, slopes shall be adjusted to ensure that maximum allowable sidewalk cross slopes are not exceeded).

45. Finish pavement grades at transition to existing pavement shall match existing pavement grades or be feathered past joints with existing pavement as required to provide a smooth, free draining surface.

46. All existing or constructed manholes, cleanouts, monument boxes, gas valves, water valves and similar structures shall be adjusted to match finish grade of the pavement, sidewalk, landscaped area or median strip wherein they lie. Verify that all valve boxes and risers are clean and centered over the operating nut.

47. Unless otherwise shown on the drawings, no cut or fill slopes shall be constructed steeper than 3H:1V.

48. Unless otherwise shown on the landscape plans, all planter areas, shall be backfilled with approved topsoil minimum 8" thick. Stripping materials shall not be used for planter backfill.

49. Contractor shall seed and mulch (uniformly by hand or hydroseed) all exposed slopes and disturbed areas which are not scheduled to be landscaped, including trench restoration areas. If the Contractor fails to apply seed and mulch in a timely manner during periods favorable for germination, or if the seeded areas fail to germinate, the Owner's Representative may (at his discretion) require the Contractor to install sod to cover such disturbed areas.

50. Grading shown on the drawings is critical to functioning of detention system and shall be strictly followed.

51. Contractor shall coordinate and ensure that detention pond volumes are inspected and approved by public agencies having jurisdiction before paving and landscaping.

CURBS & SIDEWALKS:

52. Unless otherwise shown or indicated on the drawings, 6-inches nominal curb exposure used for design of all parking lot and street grades.

53. Where new curbing connects to existing curbing or is installed along existing streets or pavement, the gutter grade shall match the existing street grades so as to allow drainage from the street to the gutter and through any transitions. The Contractor shall notify the Owner's Representative in writing of any grade discrepancies or problems prior to curb placement.

54. Road widening design is based on available survey taken at random intervals. Street pavement widening cross slope shall be a minimum of 2% and a maximum of 5% except at intersections, where the street cross slopes shall not exceed 2% maximum (intersection defined from end of curb radius both directions). Prior to placing curbs, Contractor shall field verify pavement widening cross slope and contact Engineer if the design pavement widening cross slope is not within the limits stated above.

55. Contractor shall construct all handicap access ramps in accordance with current ADA requirements.

56. Sidewalks shall be a minimum of 4-inches thick. Driveways and alley approaches shall be minimum 8-inches thick. All curbs, sidewalks and driveways shall be constructed using 3300-psi concrete, and shall be cured with Type 1 or Type 1D clear curing compound. All sidewalks shall be ADA compliant.

57. Curb & sidewalk concrete shall be placed only during periods when it will not be damaged by rain (protect unhardened concrete from precipitation). Concrete shall not be placed on frozen baserock. Do not begin concrete placement until temperature in the shade is a minimum of 35°F and rising, and stop placement if air temperature falls below 35°F. Protect concrete from freezing for a minimum of 5 days after placement per OSSC (ODOT/APWA) 00440.40.d & 00756.40 or the project specifications, whichever is more stringent.

58. Contraction joints shall be installed directly over any pipes that cross under the sidewalk, to control cracking. In general, cracks in new curbs or sidewalks (at locations other than contraction joints) are not acceptable, and cracked panels shall be removed & replaced unless otherwise approved by the Approving Agency and the design engineer.

59. All sidewalks shall be ADA compliant. Direction of sidewalk cross slope shall conform with the slope direction shown on the grading plan. Sidewalk cross slopes shall not exceed 1:67 (1.5%) nor be less than 1%. Longitudinal slope shall not exceed 1:20 (5%).

60. Where trench excavation requires removal of PCC curbs and/or sidewalks, the curbs and/or sidewalks shall be sawcut and removed at a tooled joint unless otherwise authorized in writing by the Approving Agency. The sawcut lines shown on the drawings are schematic and not intended to show the exact alignment of such cuts.

61. Unless otherwise shown on the drawings, areas along curbs and sidewalks shall be backfilled with approved topsoil, as well as being seeded and mulched (or hydroseeded).

PIPED UTILITIES:

62. All tapping of existing sanitary sewer, must be done by City forces.

63. All tapping to be done by City of Salem forces. To schedule water/sewer/storm taps call (503) 588-6333. Taps are generally available within two business days.

64. The Contractor shall have appropriate equipment on site to produce a firm, smooth, undisturbed subgrade at the trench bottom, true to grade. The bottom of the trench excavation shall be smooth, free of loose materials or tooth grooves for the entire width of the trench prior to placing the granular bedding material.

65. All pipes shall be bedded with minimum 6-inches of 3/4"-0 crushed rock bedding and backfilled with compacted 3/4"-0 crushed rock in the pipe zone (crushed rock shall extend a minimum of 12-inches over the top of the pipe in all cases). Unless CDF or other backfill is shown or noted on the drawings, crushed rock trench backfill shall be used under all improvement areas, including pavement, sidewalks, foundation slabs, buildings, etc.

66. Granular trench bedding and backfill shall conform to the requirements of OSSC (ODOT/APWA) 02630.10 (Dense Graded Base Aggregate), 3/4"-0. Unless otherwise shown on the drawings, compact granular backfill to 92% of the maximum dry density per AASHTO T-180 test method (Modified Proctor).

67. Contractor shall arrange to abandon existing sewer and water services not scheduled to remain in service in accordance with approving agency requirements.

68. All piped utilities abandoned in place shall have all openings closed with concrete plugs with a minimum length equal to 2 times the diameter of the abandoned pipe.

69. The end of all utility service lines shall be marked with a 2-x-4 painted white and wired to pipe stub. The pipe depth shall be written on the post in 2" block letters.

70. All non-metallic water, sanitary and storm sewer piping shall have an electrically conductive insulated 12 gauge solid core copper tracer wire the full length of the installed pipe using blue wire for water and green wire for storm and sanitary piping. Tracer wire shall be extended up into all valve boxes, catch basins, manholes and lateral cleanout boxes. Tracer wire penetrations into manholes shall be within 18 inches of the rim elevation and adjacent to manhole steps. The tracer wire shall be tied to the top manhole step or otherwise supported to allow retrieval from the outside of the manhole. All tracer wire splices shall be made with waterproof splices or waterproof/corrosion resistant wire nuts.

71. No trenches in sidewalks, roads, or driveways shall be left in an open condition overnight. All such trenches shall be closed before the end of each workday and normal traffic and pedestrian flows restored.

72. Before mandrel testing, TV inspection or final acceptance of gravity pipelines, all trench compaction shall be completed and all sewers and storm drains flushed & cleaned to remove all mud, debris & foreign material from the pipelines, manholes and/or catch basins.

73. Where future extensions are shown upstream of new manholes (sewer or storm), catch basins or junction boxes, pipe stubs (with gasketed caps) shall be installed at design grades to a point 2' minimum outside of the structure.

WATER SYSTEM:

74. City forces to operate all valves, including fire hydrants, on existing public mains.

75. All 4-inch water mains and larger shall be class 52 ductile iron.

76. All fittings 4-inches through 24-inches in diameter shall be ductile iron fittings in conformance with AWWA C-153 or AWWA C-110. The minimum working pressure for all MJ cast iron or ductile iron fittings 4-inches through 24-inch in diameter shall be 350 psi for MJ fittings and 250 psi for flanged fittings.

77. All water mains to be installed with a minimum 36 inch cover to finish grade unless otherwise noted or directed. Water service lines shall be installed with a minimum 30-inch cover. Deeper depths may be required as shown on the drawings or to avoid obstructions.

78. Unless otherwise shown or approved by the Engineer, all valves shall be flange connected to adjacent tees or crosses.

79. Thrust restraint shall be provided on all bends, tees and other direction changes per Approving Agency requirements and as specified or shown on the drawings.

80. Water service pipe 2-inch and smaller on the public side of the meter shall be Type K soft copper tubing conforming to ASTM B-88. Water service pipe 3-inch and larger shall conform to the construction drawings and approving agency standards.

81. Unless otherwise noted, water service pipe 3-inch and smaller on the private side of the meter shall be Schedule 40 PVC. Water service pipe 4-inches and larger on the private side of the meter shall be C900 DR 18. Unless otherwise specified, private water service piping shall be hydrostatically pressure tested to a minimum of 150% of the maximum static pressure at the site. All materials and workmanship for all private water lines, including water lines located within any building envelope, shall be installed in conformance with Uniform Plumbing Code requirements. All water service pipe on the private side of the meter shall be installed by a licensed plumber in accordance with Uniform Plumbing Code requirements.

82. Domestic and fire backflow prevention devices and vaults shall conform to requirements of public and/or private agencies having jurisdiction. The Contractor shall be responsible for having backflow devices tested and certified prior to final acceptance of the work.

83. Contractor shall provide all necessary equipment and materials (including plugs, blowoffs, valves, service taps, etc.) required to flush, test and disinfect waterlines per the Approving Agency requirements.

84. The work shall be performed in a manner designated to maintain water service to buildings supplied from the existing waterlines. In no case shall service to any main line or building be interrupted for more than four (4) hours in any one-day. Contractor shall notify the Approving Agency and all affected residents and businesses a minimum of 24 business hours (1 business day) before any interruption of service.

85. Where new waterlines cross below or within 18-inches vertical separation above a sewer main or sewer service lateral, center one full length of new line pipe at point of crossing the sewer line or sewer lateral. In addition (unless otherwise approved in writing by the Approving Agency, existing sewer mains and/or service laterals within this zone shall be replaced with a full length of Class 50 Ductile Iron or C-900 PVC pipe (DR 18) centered at the crossing in accordance with OAR 333-061 and Approving Agency requirements. Connect to existing sewer lines with approved rubber couplings. Example: For an 8-inch waterline with 36-inches cover, 4-inch service lateral inverts within 5.67-feet (68-inches) of finish grade must be DI or C-900 PVC at the crossing.

86. All waterlines, services and appurtenances shall be pressure tested for leakage. All testing shall conform to requirements as outlined in the specifications, Approving Agency standards and/or testing forms. The hydrostatic test shall be performed with all service line corporation stops open and meter stops closed, and with all hydrant line valves open. Prior to the start of each pressure test, the position of all mainline valves, hydrant line valves and service line corporation stops in the test segment shall be verified.

87. After the pressure test and prior to disinfecting, the water lines shall be thoroughly flushed through hydrants, blow offs or by other approved means.

88. Disinfection & Bacteriological Testing. All water mains and service lines shall be chlorine disinfected per Approving Agency requirements, AWWA C-651 or OAR 333-061 (25 mg/L minimum chlorine solution, 24 hours contact time), whichever is more stringent. Unless otherwise approved by the Approving Agency, a Representative from the Approving Agency shall witness the application of the chlorine solution and the chlorine testing at the end of the 24 hour contact period. After the 24 hour chlorine contact period, the free chlorine concentration shall be checked, and if it is found to be 10 mg/L or more, the chlorine solution shall be drained (otherwise the line shall be rechlorinated), the waterline flushed with potable water, and a minimum of two consecutive samples taken at least 24 hours apart shall be collected from the waterline for microbiological analysis (ie. one sample immediately after flushing, and another sample 24 hours later). Contractor to pay for laboratory analysis of water samples taken under the supervision of the Approving Agency. If the results of both analyses indicate that the water is free of coliform organisms, the waterline may be placed in service. Should the initial treatment prove ineffective, the chlorination shall be repeated until confirmed tests show acceptable results.

89. Disinfection of Connections. For connections which cannot be disinfected with the waterline mainlines as noted above, all fittings, valves and appurtenances, including tool surfaces which will come in contact with potable water, shall be thoroughly cleaned by washing with potable water and then swabbed or sprayed with a one percent (1%) hypochlorite solution (10,000 mg/L) in accordance with the requirements of AWWA C-651 and OAR 333-061.

SEWER & STORM MANHOLES:

90. All precast manholes shall be provided with integral rubber boots. Where manholes without integral rubber boots are approved by the Owner's Representative and Approving Agency, a pipe joint shall be provided on all mainlines within 1.5 feet of the outside face of the manhole. Where required by Public Works, watertight lockdown lids required on all manholes outside of public right-of-way.

91. Openings for connections to existing manholes shall be made by core-drilling the existing manhole structure, and installing a rubber boot. Connections shall be watertight and shall provide a smooth flow into and through the manhole with no ponding. Small chipping hammers or similar light tools which will not damage or crack the manhole base may be used to shape channels, but may be used to enlarge existing openings only if authorized in writing by the Owner's Representative. Use of pneumatic jackhammers shall be prohibited.

92. Manhole channels depths (sewer & storm) shall be to the heights shown on the drawings, but in no case shall the channel depth be less than 2/3 of the pipe diameter. Channels, as well as shelves between the channels and the manhole walls, shall be sloped to drain per plan details.

93. Manholes constructed over existing sanitary sewers shall conform to the requirements of OSSC (ODOT/APWA) 490.41, Manholes over Existing Sewers. The existing pipe shall not be broken out until after the completion of the manhole test.

SANITARY SEWER SYSTEM:

94. Unless otherwise specified, sanitary sewer pipe shall be solid wall PVC in conformance with ASTM D3034, SDR 35 (≤15") or ASTM F-679, PS 46 (≥18"). Minimum stiffness shall be 46 psi per ASTM D-2412 and joint type shall be elastomeric gasket conforming to ASTM D-3212. All other appurtenances and installation to conform to the Approving Agency's specifications. All materials and workmanship for all private sanitary sewers, including sewers located within any building envelope, shall be installed in conformance with Uniform Plumbing Code requirements.

95. Unless otherwise specifically noted on the drawings, manufactured fittings (tee or wye per Approving Agency) shall be used for all lateral connections to new sewer mainlines.

96. Contractor shall provide all necessary materials, equipment and facilities to test sanitary sewer pipe and appurtenances for leakage in accordance with testing schedule herein or the Approving Agency's construction standards, whichever are more stringent. Sanitary sewer pipe and appurtenances shall be tested for leakage. Leakage tests shall include an air test of all sewer mains and laterals and vacuum testing of the manholes. Manhole testing shall be performed after completion of AC pavement and final surface restoration.

97. After manhole channeling and prior to mandrel testing and/or TV inspection, flush and clean all sewers, and remove all foreign material from the mainlines and manholes. Failure to clean all dirt, rock and debris from pipelines prior to TV inspection will result in the need to re-clean and re-TV the sewer lines.

98. Contractor shall conduct deflection test of flexible sanitary sewer pipes by pulling an approved mandrel through the completed pipeline following trench compaction. The diameter of the mandrel shall be 95% of the initial pipe diameter. Test shall be conducted not less than 30 days after the trench backfilling and compaction has been completed, unless otherwise approved by the Approving Agency.

99. Upon completion of all sanitary sewer construction, testing and repair, the Contractor shall conduct a color TV acceptance inspection of all mainlines in accordance with OSSC (ODOT/APWA) 445.74 to determine compliance with grade requirements of OSSC (ODOT/APWA) 445.40.b. The TV inspection shall be conducted by an approved technical service which is equipped to make audio-visual recordings of the TV inspections on DVD or flash drive. Unless otherwise required by the Approving Agency, a standard 1-inch diameter ball shall be suspended in front of the camera during the inspection to determine the depth of any standing water. Sufficient water to reveal low areas or reverse grades shall be discharged into the pipe immediately prior to initiation of the TV inspection. The DVD and written report shall be delivered to the Approving Agency.

STORM DRAIN SYSTEM:

100. Storm sewer pipe materials shall conform to the construction drawings and Approving Agency's requirements. Unless otherwise noted or shown on the drawings, storm sewer pipe materials with watertight joints shall conform to the attached "Storm Pipe Table". Contractor shall use uniform pipe material on each pipe run between structures unless otherwise directed or approved. Jointed HDPE pipe shall not be used for slopes exceeding ten percent (10%). All materials and workmanship for all private storm drains, including storm drains located within any building envelope, shall be installed in conformance with Uniform Plumbing Code requirements.

101. Contractor shall designate the pipe material actually installed on the field record drawings and provide this information for inclusion on the as-built drawings.

102. Catch basins and junction boxes shall be set square with buildings or with the edge of the parking lot or street wherein they lie. Storm drain inlet structures and paving shall be adjusted so water flows into the structure without ponding water.

103. Unless otherwise approved by the Engineer, all storm drain connections shall be by manufactured tees or saddles.

104. Unless otherwise shown on the drawings, all storm pipe inlets & outfalls shall be beveled flush to match the slope wherein they lie.

105. Sweep (deflect) storm sewer pipe into catch basins and manholes as required. Maximum joint deflection shall not exceed 5 degrees or manufacturers recommendations, whichever is less.

106. Unless otherwise shown or directed, install storm sewer pipe in accordance with manufacturer installation guidelines.

107. After manhole channeling and prior to mandrel testing or final acceptance, flush and clean all sewers, and remove all foreign material from the mainlines, manholes and catch basins.

108. Mandrel Testing. Contractor shall conduct deflection test of flexible sewer pipes by pulling an approved mandrel through the completed pipeline following trench compaction. The diameter of the mandrel shall be 95% of the initial pipe diameter. Test shall be conducted not more than 30 days after the trench backfilling and compaction has been completed.

109. TV Inspection. Upon completion of all storm sewer construction, testing and repair, the Contractor shall conduct a color TV acceptance inspection of all mainlines in accordance with OSSC (ODOT/APWA) 445.74 to determine compliance with grade requirements of OSSC (ODOT/APWA) 445.40.b. The TV inspection shall be conducted by an approved technical service which is equipped to make audio-visual recordings of the TV inspections on DVD (VHS video tape acceptable only upon prior written approval by Public Works). Unless otherwise required by the agency with jurisdiction, a standard 1-inch diameter ball shall be suspended in front of the camera during the inspection to determine the depth of any standing water. Sufficient water to reveal low areas or reverse grades shall be discharged into the pipe immediately prior to initiation of the TV inspection. The DVD and written report shall be delivered to the Approving Agency.

110. Prior to acceptance, the Owner's Representative may lamp storm lines upstream & downstream of structures to verify that the pipes are clean and there is no grout or debris in the mainline, and that there are no observable bellies in the line. When necessary, sufficient water to reveal low areas shall be discharged into the pipe by the Contractor prior to any such inspection by the Owner's Representative or the Approving Agency.

FRANCHISE & PRIVATE UTILITIES:

111. Unless otherwise shown on the drawings or approved by jurisdiction having authority, all new franchise and private utilities (power, cable TV, telephone, gas, data, communication, control, alarms, etc.) shall be installed underground. Installation of such utilities or associated conduits in a common trench with public water, sanitary sewer, or storm sewer is prohibited.

112. Contractor shall coordinate with gas, power, telephone, and cable TV Company for location of conduits in common trenches, as well as location or relocation of vaults, pedestals, etc. The Contractor shall be responsible for providing franchise utility companies adequate written notice of availability of the open trench (typically 10 days minimum), and reasonable access to the open trench. Unless otherwise approved in writing by the Approving Agency, all above-grade facilities shall be located in PUEs (where PUEs exist or will be granted by the development), and otherwise shall be placed in a location outside the proposed sidewalk location.

113. Unless otherwise approved by the Approving Agency, installation of private utilities (including either franchise utilities or private water, sewer or storm services) in a common trench with or within 3 feet horizontally of and paralleling public water, sanitary sewer or storm drains is prohibited.

114. Power, telephone and TV trenching and conduits shall be installed per utility company requirements with pull wire. Contractor shall verify with utility company for size, location and type of conduit before construction, and shall ensure that trenches are adequately prepared for installation per utility company requirements. All changes in direction of utility conduit runs shall have long radius steel bends.

115. Contractor shall notify and coordinate with franchise utilities for removal or relocation of power poles, vaults, pedestals, manholes, etc. to avoid conflict with Public utility structures, fire hydrants, meters, sewer or storm laterals, etc.

NO.	DATE	DESCRIPTION	BY
—		REVISIONS	

VERIFY SCALE
BAR IS ONE INCH ON ORIGINAL DRAWING
0 1"
IF NOT ONE INCH ON THIS SHEET, ADJUST SCALES ACCORDINGLY

DSN. JW
DRN. AK
CKD. JW
DATE: 06/2022

REGISTERED PROFESSIONAL ENGINEER
OREGON
WILLIAM J. WELLS
REVIEW
RENEWS: 6/30/2024

WESTECH ENGINEERING, INC.
CONSULTING ENGINEERS AND PLANNERS
3841 Fairview Industrial Dr. S.E., Suite 100, Salem, OR 97302
Phone: (503) 585-2474 Fax: (503) 585-3986
E-mail: westech@westech-eng.com

CLUTCH INDUSTRIES
BLOSSOM APARTMENTS

WESTECH CONSTRUCTION NOTES

DRAWING
C6.0

JOB NUMBER
3366.0000.0

REQUIRED TESTING AND FREQUENCY TABLE *Contractor to notify Owner's Representative prior to all testing, to allow Owner's Representative to be present if desired.*		Party Responsible for payment		
		Contractor		Others (see note 1)
Streets, Fire Lanes, Common Driveways, Parking Lots, Pads, Fills, etc.				
Subgrade	1 Test/4000 S.F./Lift (4 min), locations acceptable to approving agency (typically alternate sides of road or access aisles)	✓	See note 2 & note 3	
Engineered Fills	1 Test/4000 S.F./Lift (4 min), locations acceptable to approving agency	✓	See note 2 & note 5	
Baserock	1 Test/4000 S.F./Lift (4 min), locations acceptable to approving agency (typically alternate sides of road or access aisles)	✓	See note 2 & note 3	
Asphalt	1 Test/6000 S.F./Lift (4 min), locations acceptable to AA (typ. alternate as above)	✓	See note 2	
Piped Utilities, All				
Trench Backfill	1 Test/200 Foot Trench/Lift (4 min)	✓	See note 2	
Trench AC Restoration	1 Test/300 Foot Trench (4 min)	✓	See note 2	
Water				
Pressure Test	(to be witnessed by Owner's Representative or approving agency)	✓	See note 4	
Bacterial Water Test	Per Oregon Health Division	✓	See note 2	
Chlorine Residual Test	Per City Requirements	✓		
Sanitary Sewer				
Air Test	Per City or APWA Requirements, whichever is more stringent	✓	See note 4	
Mandrel	95% of actual inside diameter	✓	See note 4	
TV Inspection	All. Lines must be cleaned prior to TV work	✓		
Manhole	(1) Vacuum test per manhole, witnessed by Owner's Representative or approving agency	✓	See note 2	
Storm				
Mandrel	95% of actual inside diameter	✓	See note 4	
TV Inspection	All. Lines must be cleaned prior to TV work	✓		
Concrete, Block, etc.				
Slump, Air & Cylinders for structural & reinforced concrete, equipment slabs, curbs, sidewalks & PCC pavements. Unless otherwise specified, one set of cylinders per 100 cubic yards (or portion thereof) of each class of concrete placed per day. Slump & air tests required on same load as cylinders.		✓	See note 2	

Note 1: "Others" refers to Owner's authorized Representative or Approving Agency as applicable. Contractor responsible for scheduling testing. All testing must be completed prior to performing subsequent work.

Note 2: Testing must be performed by an approved independent testing laboratory.

Note 3: In addition to in-place density testing, the subgrade and base rock shall be proof-rolled with a loaded 10 yard dump truck provided by the Contractor. Baserock proofroll shall take place immediately prior to (within 24 hours of) paving, and shall be witnessed by the Owner's authorized Representative or approving agency. Location and pattern of testing and proofroll to be as approved or directed by said Owner's authorized Representative or approving agency.

Note 4: To be witnessed by the Owner's Representative or approving agency. The Contractor shall perform pretests prior to scheduling witnessed waterline or sanitary sewer pressure tests, or pipeline mandrel test.

Note 5: The approved independent laboratory retained by the Contractor shall provide a certification (stamped by an engineer licensed in the State of Oregon) that the subgrade was prepared and all engineered fills were placed in accordance with the provisions of the construction drawings and the contract documents.

Contractor to notify Owner's Representative prior to all testing, to allow Owner's Representative to be present if desired.

STORM PIPE TABLE	
Cover Depth	6" – 18" Diameter
Less than 2' Cover	Class 50 ductile iron pipe with bell and spigot joints and rubber gasket.
2' to 2-1/2' Cover	Pipe specified for lesser cover depths –or– Class 3, ASTM C-14 non-reinforced concrete pipe with bell and spigot joints & rubber gaskets, ASTM 150 Type II cement. –or– PVC pipe conforming to AWWA C900 DR 18 (6"-12") or AWWA C-905 (14"-18") with bell and spigot joints and rubber gasket
2-1/2' to 15' Cover	Pipe specified for lesser cover depths –or– PVC pipe conforming to ASTM D-3034 PVC SDR 35 (6"-15") or ASTM F-679 PVC solid wall SDR 35 (18") with bell and spigot joints and rubber gasket. –or– HDPE (high density polyethlene) pipe conforming to AASHTO M-252, (8"-10") or AASHTO M-294 (12"-18"). For slopes less than 6% the pipe shall be ADS N-12 IB ST, Hancor Sure-Lok F477, or approved equal. For slopes greater than 6% the pipe shall be ADS N-12 IB WT, Hancor Blue Seal, or approved equal with watertight pressure testable fittings, –except– jointed HDPE (high density polyethylene) pipe referenced above not permitted for depth to invert greater than 12 feet.

Perforated pipe underdrains to be SCH 40 ABS or SCH 40 PVC perforated or slotted pipe unless otherwise specified.

NO.	DATE	DESCRIPTION	BY
–			

REVISIONS

VERIFY SCALE
BAR IS ONE INCH ON ORIGINAL DRAWING
0 1"
IF NOT ONE INCH ON THIS SHEET, ADJUST SCALES ACCORDINGLY

DSGN. JW
DRN. AK
CKD. JW
DATE: 06/2022

REGISTERED PROFESSIONAL ENGINEER
WILLIAM J. WELLS
OREGON
REVIEW
RENEWS: 6/30/2024

WESTECH ENGINEERING, INC.
CONSULTING ENGINEERS AND PLANNERS
3841 Fairview Industrial Dr. S.E., Suite 100, Salem, OR 97302
Phone: (503) 585-2474 Fax: (503) 585-3986
E-mail: westech@westech-eng.com

CLUTCH INDUSTRIES
BLOSSOM APARTMENTS

WESTECH CONSTRUCTION NOTES

DRAWING
C6.1

JOB NUMBER
3366.0000.0

MARION COUNTY STANDARD CONSTRUCTION NOTES

I. GENERAL NOTES

1. Details on approved plans take precedence over any applicable Standard Construction Notes. These Notes shall take precedence over any other general or standard notes in the plans that deal with the same subject.

2. All materials and workmanship for facilities in road right-of-way of slope/drainage easements shall conform to the applicable regulations, specifications, codes, and requirements of Marion County, American Public Work Association Oregon Chapter (A.P.W.A.) standard plans and specifications, the Oregon Specifications State Plumbing Code, the Uniform Building Code, the Oregon Department of Environmental Quality, and the Oregon Health Division (OHD).

3. The Contractor shall perform all work necessary to complete the project in accordance with the approved construction plans including such incidentals as may be necessary to meet applicable agency requirements and provide a completed project.

4. The County must approve, before construction, any alteration, or variance from the approved plans. Any variations from these plans shall be proposed on construction field prints, transmitted to the Engineer, and forwarded to the County for approval.

5. Marion County's Land Development Engineering & Permits section typically will inspect all construction with in the right-of-way and the slope/drainage easements.

6. Marion County's "Building Inspection Section" typically inspects all the construction on private property. Additionally, various agencies inspect the construction of their facilities in the County public right-of-way, such as the city for water and sanitary sewer, or the utility companies for their particular utility.

7. Inspections by the County, shall not in any way relieve the Contractor from any obligation to perform the work in strict compliance with the applicable codes and agency requirements.

8. The Contractor shall be responsible to ensure that all required or necessary inspections are completed by authorized inspectors prior to proceeding with subsequent work which covers or that is dependent on the work to be inspected. Failure to obtain necessary inspection(s) and approval(s) shall result in the Contractor being fully responsible for all problems arising from un-inspected work and may require the Contractor to re-expose areas of concern.

9. The Contractor shall locate and mark all existing property and street monuments before construction. Any monuments disturbed during construction of the project, shall be replaced by a Registered Professional Land Surveyor at the Contractor's expense. Monument boxes are required for all public land corner monuments that fall within paved areas and also for centerline monuments within, or if applicable, outside the boundary of subdivision or condominium plats. See Marion County Surveyor's Office for approved monument boxes.

10. The required identification signs shall be in place before the start of work and shall be present during the construction period until all the work on the project is complete.

11. The Contractor shall attend a pre-construction meeting with the County to review plans and details before the start of work. The Contractor shall contact Marion County Public Works at 503-584-7714, 48-hours prior to the intended beginning of work.

12. ATTENTION: Oregon law requires you to follow rules adopted by the Oregon Utility Notification Center. Those rules are set forth in OAR 952-001-0010. You may obtain copies of the rules by calling the center. (Note: the telephone number for the Oregon Utility Notification Center is 503-232-1987)

13. The Contractor shall conform to DEQ Stormwater Permit No. 1200c for construction activities where one (1) acre or more is disturbed.

14. Temporary and Permanent erosion and sediment control measures shall be used as needed. The Contractor shall adhere to controlling agency's standards for control measures.

15. The Contractor shall procure a right of entry permit from affected railroads for all work within the railroad right-of-way and conform to all conditions of the permit.

16. Unless otherwise approved by the County, construction of all public facilities shall be done between 7:00 AM and 6:00 PM, Monday through Saturday.

17. Work in the right-of-way that impacts traffic and is within the urban growth boundary or on arterial roads, may be restricted to 8:30 AM to 3:30 PM. Work on Lancaster Drive, Silverton Road west of Hollywood Drive or State Street west of Elma Street, and First Street in Stayton, that impacts traffic, shall normally be done from 9:00 PM to 6:00 AM.

18. No work in the right-of-way that impact traffic may be done in freezing weather conditions. Significant reduced visibility conditions may be cause for the County to stop the work.

19. RECORD DRAWINGS. The Contractor shall maintain one complete set of approved drawings on the construction site at all times whereon he will record any approved deviations in construction from the approved plans, as well as the station locations and depths of all existing utilities encountered. These field record drawings shall be kept up to date at all times and shall be available for inspection by the County upon request. Failure to conform to this requirement may result in delay of final acceptance of the project.

II. TRAFFIC CONTROL

1. Specific traffic control plans may be required as a part of the permit. Temporary traffic control signage shall be 36"x36". Signs must be clean and good repair. The work area during construction or maintenance performed under the permit provisions shall be protected in accordance with the current Manual on Uniform Traffic Control Devices for Streets and Highway. US Department of Transportation, and the Oregon Department of Transportation supplements thereto. Flaggers must carry a current card or certificate indicating their completion of an approved work zone control course.

2. The Contractor shall be responsible to see to it that all persons including but not limited to contractors, employees, subcontractors and visitors shall at all times wear safety vests/shirts or rain gear when on site in the public right-of-way. Persons remaining in vehicles such as truck drivers may be exempted.

3. Any work requiring traffic control before dawn or after dusk shall have lighted traffic control per the requirements in the MUTCD.

4. All traffic signs and pavement markings shall be furnished, installed, and moved if necessary by the County at the developer's expense. The Contractor is responsible to contact the Marion County Sign Shop at 503-588-5344 for a billable private work order. CAUTION - The Contractor is not to move permanent traffic signage. The Contractor shall be responsible to provide stripe removal, temporary striping, and striping layout. The Contractor shall also give the Sign Shop 48-hours' notice prior to the anticipated striping date. When the County Sign Shop is unable to provide the signage when requested, the Contractor shall maintain temporary signage until replaced with permanent signage. When new roads are paved, they shall remain closed to all vehicular traffic by Type III barricades until all signage and striping is in place per the approved plans.

5. If permanently installed traffic sign is in the way of the work, the sign may temporarily be installed on Type III barricades when approved by the County, but in no case may a sign be leaned up against another object, set aside, placed on the ground, or moved to another location.

6. The County at the permitees expense shall replace damaged or removed road signs. Any traffic striping removed or eradicated shall be temporarily re-marked, and maintained by the contractor. Only the County, through a billable private work order, shall do permanent re-striping.

7. Access to driveways shall be maintained at all times. All traffic control measures shall be approved and in place before any construction activity.

8. Sidewalks closed when needed for work operations shall be reopened as soon as possible and at the end of the day. An alternate pedestrian path must be approved by the County and properly signed to reroute pedestrians.

9. All stubbed streets for future road construction shall have a Type III barricade centered and across 2/3 the width of the road, a barricade across the ends of the sidewalk, and a six inch (6") asphalt berm crossing the road from curb to curb on curbed streets.

III. EXISTING UTILITIES & FACILITIES

1. The Contractor shall install and maintain Erosion and Sediment Control (ESC) measures throughout the duration of the project, including but not limited to, a 50-foot long gravel construction entrance. Slit fences or straw bales may be required as additional measures.

2. All existing facilities shall be maintained in-place by the Contractor unless otherwise shown or directed. The Contractor shall take all precautions necessary to support, maintain, or otherwise protect existing utilities and other facilities at all times during construction. The Contractor will leave existing facilities in an equal or better-than-original condition and to the satisfaction of the County Engineer.

3. Existing surface features, such as walls and fencing, shall normally be replaced in kind.

4. The Contractor shall have all existing utilities located prior to the start of any work. Any disturbed underground locating/safety warning tape shall be restored in kind as found.

5. The Contractor shall field verify location and depth of all existing utilities where new facilities cross. The Contractor shall be responsible for exposing potential utility conflicts far enough ahead of construction to make necessary grade modifications without delaying the work. If grade modification is necessary, the Contractor shall notify the Design Engineer, and the Design Engineer shall obtain approval from the County before construction. All utility crossings shall be pot-holed as necessary prior to excavating to prevent grade or alignment conflicts.

6. Utilities or portions of utilities that are abandoned in place shall be removed by the Contractor to the extent necessary to accomplish the work. The Contractor shall plug with concrete the remaining exposed end of the abandoned utility to a minimum length into the stub equal to twice the pipe's diameter.

7. The Contractor shall remove all existing mailboxes, fences, landscaping, etc., as required to avoid damage during construction and replace them to existing or better condition. Temporary relocation of removed mailboxes is required. Temporary relocation of removed fencing shall be required unless special arrangements are made with the adjacent property owner.

8. Removed asphalt road surface shall be patched with cold (temporary) or hot mix asphalt, or steel plated at the close of each workday. No trenches within 10' of the pavement shall be left open overnight. Open trenches in the right-of-way beyond 10' of the pavement shall be protected with lighted barricades and fencing overnight.

9. The Contractor shall locate and mark all existing property and street monuments prior to construction. A Registered Professional Land Surveyor at the Contractor's expense shall replace any monuments disturbed during construction of the project.

10. Site grading shall not impact surrounding properties in a negative manner. Construction of improvements on the property shall not block historical or naturally occurring runoff from adjacent properties.

11. No natural drainage shall be modified without County approval.

IV. CLEARING, GRADING & PAVING

1. Property owners shall be given at least two weeks of prior notice, to remove any vegetation in the right-of-way along their frontage that will be impacted by the construction. The owner shall also be given any removed vegetation if they should so desire, including felled trees. This vegetation shall be placed on the adjacent private property, out of the right-of-way.

2. Landscape outside turnpike road shoulders and ditches that is disturbed by construction shall normally be restored. Shrub and tree trimmings shall be removed daily from the site. Lawn area restoration shall include a minimum of at least a 4" layer of topsoil to match the original elevation and shall be raked free of rocks and debris. The area shall be reseeded after the first fall rains or earlier if approved by the County and adjacent property owner. Planted shrubs shall be replaced in kind and maintained until established. Trees and volunteer shrubs shall normally not be replaced.

3. Clear and grub within work limits all surface vegetation, trees, stumps, brush, roots, etc. All trees, brush, and debris associated with clearing, stripping, or grading shall be removed and disposed of out of right-of-way.

4. When a turnpike access is scheduled to be removed, the asphalt approach apron shall be saw cut in line with the edge of the road pavement and removed. The culvert pipe shall be removed and the ditch restored. Fresh shoulder rock shall be provided to match the existing shoulder.

5. All road construction that occurs between September 30 and May 1 shall include the placement of ODOT Type I drainage fabric or approved equal on top of the prepared sub-grade before the crushed rock aggregate base section (base rock) is constructed.

6. County approval is required before proceeding with placement of base rock. Proof roll of the sub-grade and base rock with a fully loaded dump truck (55) tons provided by the Contractor shall be required. (Questionable areas shall be over excavated with filter fabric as directed by the County.) Crushed base rock shall conform to section 00680 OSHD standard specifications. Compaction shall be at least 95% of the maximum dry density per AASHTO T-99 test method. The County must receive written base rock compaction test results from an independent testing laboratory at least two days before placing AC pavement. A random test is required for each 100 feet of roadway stationing, randomly at each trench crossing, and as directed by the County.

7. During compaction of aggregate base, material shall be maintained within 2% of the optimum moisture content. The Contractor shall begin compaction of each layer immediately after the material is spread, and continue until a density of not less than 95% of AASHTO T-99 has been achieved.

8. The surface of the aggregate base shall be within -0.04 foot to +0.02 foot of plan elevation at any one point. The final surface shall not deviate at any point more than 0.04 foot from the bottom of a 12-foot straightedge laid in any direction of the surface of the roadway.

9. All fills within the public right-of-way shall be engineered, Construct roadway fills in six-inch (6") lifts compacting each lift to 95% of the maximum dry density per AASHTO T-99 method. Written compaction tests of the fill by an independent testing laboratory must be received and approved by the County if requested by the inspector.

10. When the County approves the cutting of road pavement, the cuts shall be clean straight lines by sawing. The pavement restoration shall be a "blanket inlay" to tie to the existing pavement. Strips of existing pavement less than 3' wide adjacent to the removed asphalt shall also be removed and repaved as one patch. No abrupt pavement edges are allowed overnight. Abrupt edges shall be backfilled with base rock to the pavement level with a maximum 3:1 down slope. Pavement overlays shall be joined to existing pavement via a "blanket inlay" joint. Feather overlays are not normally approved.

11. County approval is required before proceeding with paving. The County shall determine the Hot Mixed Asphalt Concrete (HMAC) mix. (Local roads shall normally be Level 2, ½ inch, Dense, PG 64-22; and truck/bus routes Level 3, ½ inch, Dense, PG 64-22.) Pavement shall be compacted to a minimum pf 91% of maximum density as determined by the Rice standard method for the first course and 92% on any additional or top courses. The County must receive written compaction test results from an independent testing laboratory before the ' construction work is accepted. A random test is required for each 150 of roadway stationing and as directed by the County.

12. Any finish pavement with a Rice standard density less than a 92% shall be deemed unsuitable, and will be rejected. Any rejected material shall be removed and replaced at the expense of the Contractor.

13. Where asphalt tapers are constructed to move traffic through pavement transition areas, the tapers shall have rock shoulders with a minimum width of 2'. Storm lines shall be extended out from curbed road sections to point where the shoulders of tapers will not affect the slopes of the existing storm ditch.

14. New or overlay paving on non-curbed sections of County roads shall normally include paving approaches to join existing paving if within the right-of-way, or paving gravel approaches in the right-of-way to a maximum of 20' from the edge of road pavement.

15. The Contractor shall be responsible for adjusting all existing and constructed manholes, catch basins, cleanouts, vaults, etc., that are affected by construction and/or fill to finish grade. Storm drain inlet structures shall be adjusted so water flows into the structure without ponding water.

16. Paving on non-curbed roads shall also include the addition of shoulder rock to bring the shoulder up to the new pavement elevation.

17. Unless otherwise shown on the drawings, no cut slopes shall be constructed steeper that 1- ½ H:1V or fill slopes steeper than 4H:1V.

18. All planter areas shall be backfilled with approved topsoil at a minimum of eight inches (8") thick. Planter strips between curbs and sidewalks shall be backfilled with four inches (4") of topsoil flush with the top of concrete. Stripping materials shall not be used for planter backfill.

19. Contractor shall hydro seed all exposed slopes and disturbed areas that are not scheduled to be landscaped.

20. Grading shown on the drawings is critical to functioning of detention system and shall be strictly followed.

V. STORM, WATER, AND SANITARY UTILITIES

1. Storm drainpipe materials are to conform to the construction drawings and County requirements. The Contractor shall use uniform pipe material on each pipe run between structures unless otherwise directed or approved. Jointed HDPE pipe 15 " or smaller shall not be used for pipe grades of less than one percent (1%) or grades exceeding ten percent (10%). Storm pipe shall be water tight with appropriate gaskets and connections.

2. All pipes shall be bedded with 3/4" minus crushed rock bedding (27" diameter and smaller: 4", 30" to 60" diameter: 5", and 66" and larger: 6") and backfilled with compacted 3/4" minus crushed rock in the pipe zone (crushed rock shall extend a minimum of 12" over the top of the pipe in all cases). Pipe trenches shall have a minimum of 8" of backfill on each side of the pipe.

3. Catch basins and junctions boxes shall be set square with the street wherein they lie. Storm drain inlet structures and paving shall be adjusted so water flows into the structure without ponding water.

4. Drainage structures adjacent to new road taper sections shall be positioned at the gravel shoulder so that the fore slope of the ditch along the taper shall be no greater than a 3:1 slope.

5. Catch basins in the County right-of-way shall typically be the ODOT G-2 or CG-2 Type. Area drains shall typically be the Marion County Type I catch basin as per standard drawing. Catch basins shall have sumps of 18 " and 4" drain pipes at the road base level and at the bottom (to drain the box dry after wet weather). The drain pipes shall extend 6" beyond the box with the end covered with filter fabric.

6. The Type III catch basin shall typically be set back into the back slope of the ditch and slope with the back slope. The Type III catch basin shall typically have a 15° sloped grate.

7. Openings for connections to existing manholes, catch basins, or pipes shall be made be saw cutting or core-drilling. Use of hammer, including pneumatic jackhammers shall be prohibited. Connections shall be watertight, manufactured tees or saddles, and provide a smooth flow into and through the existing structure.

8. Unless otherwise approved by the County Engineer, all private storm drain connections to a public system shall be by manufactured tees or saddles and conform to County standards.

9. Detectable or non-detectable acid and alkali warning tape shall be provided along the full length of all-sanitary and storm laterals not located under sidewalks or paved portions of public streets. Underground warning tape shall be continuous the entire length of service laterals installed from the mainline to the back of PUE.

10. Trenches in road areas shall normally be backfilled with 1 " minus crushed rock. Rock backfill shall be tested for compaction randomly every 200' of trench. Compaction shall be at least 95% of the maximum dry density per AASHTO T-99 test method.

11. Before mandrel testing and /or TV inspection, flush and clean all storm lines, and remove all foreign material from the lines and manholes.

12. Upon completion of all storm line construction, testing, and repair, the Contractor shall have conducted a color TV acceptance VHS recorded video inspection of all public storm lines. The TV inspection shall be conducted by an approved independent technical service. Water shall be discharged into the pipe shortly prior to inspection so as to reveal any low areas. Inspection shall be made after water stops flowing. The inspection shall include a 360° view of any questionable joints and any joints at pipe material transition. A weighted standard one-inch (1") diameter ball shall be dragged in the near forefront of the view (1/3 up in the view), and it shall be free to drop at least one and half inches (1½") below the plane of the camera tractor. The video operator shall audibly note on the tape and indicate on the written report the beginning and ending of any sags 3/8" or greater, and changes of ¼" in depth. No labeling on the view shall obstruct the clear view of the ball and water around it. Inspection videos showing dirt/rock/debris in the line will not be approved. The VHS tape and written report shall be delivered to the County at least one week before asphalt paving for review and approval.

13. The Contractor shall conduct deflection test of flexible storm sewer pipes by pulling an approved mandrel that shall be 95% of the initial pipe diameter. Test shall be conducted not more than 30 days after the trench backfilling and compaction has been completed. Tests shall be done in witness by the County inspector before asphalt paving and before the construction work is accepted.

14. Trench excavation under curbs or sidewalks requires removal of the effected curbs and/or sidewalks. The curbs and/or sidewalks shall be saw cut and removed at a tooled joint.

15. All non-metallic water, sanitary, and storm sewer piping shall have an electrically conductive insulated 12-guage copper tracer wire the full length of the installed pipe using blue wire for water and green for storm and sanitary piping. Tracer wire shall be extended up into all valve boxes, manholes, and catch basins. Tracer wire penetrations into manholes and catch basins shall be within 18" of the rim elevation and adjacent to manhole steps. The tracer wire shall be tied to the top manhole step or otherwise supported to allow retrieval from the outside of the structure.

16. No trenches in roads or driveways, or within ten feet (10') of the road pavement, shall be left in an open condition overnight. All such trenches shall be closed before the end of each workday and normal traffic flow restored.

VI. CURBS AND SIDEWALKS

1. The Contractor shall have the batching plant fax to Marion County verification of the mix' s designed strength (minimum 3300-psi in 28 days) to be used on the project 48 hours before pouring concrete. Testing of the concrete by an independent certified testing laboratory may be required by the County. Testing may include tests for slump, air, and cylinders for all structures, curbs, sidewalks, and PCC pavements. One set of cylinders per 100 cubic yards of concrete poured per day is normal. Slump and air tests are required on the same load as the cylinder test.

2. Unless otherwise shown or indicated on the drawings, six-inch (6") nominal curb exposure shall be used for design of all parking lots and streets.

3. Sidewalks shall be a minimum thickness of concrete of four inches (4") and standard driveways shall be a minimum of six inches (6"). Commercial use driveways and alley approaches shall be minimum eight inches (8") of concrete. All curbs, sidewalks, and driveways shall be constructed using 3300-psi concrete with Type I or Type ID clear curing compound.

4. Concrete sidewalks which are not continuous to an existing sidewalk shall be joined to the road asphalt at the end of the walk by a ramp the same width of the sidewalk. Sidewalks must be a depth of four inches (4") of concrete. Ramps shall have two and a half inches (2 ½") of asphalt such that the grade and cross slope of the ramp meets the ADA requirements.

5. The Contractor shall provide a minimum of two curb weep holes per lot to provide for lot drainage. Weep holes shall also be provided as required as additional drain pipes shown on the drawings. Weep holes shall be located two feet (2') from each property line or as directed by the County.

6. The Contractor shall install rain drain weep hole pipe thru the curb to six inches (6") behind the back of the curb prior to acceptance of the curbing by the County. Weep holes installed in existing curbs shall be core drilled. Drainpipe shall be scheduled 40 PVC.

7. Top of curbs shall be stamped with an "S" or a "W" at the point where each sanitary sewer lateral or water service lateral crosses the curb, respectively. Letters shall be a minimum of two inches (2") high.

VII. P.U.C. UTILITIES

1. Unless otherwise shown on the drawings and approved by jurisdiction having authority, all new P.U.C. utilities (power, cable TV, telephone & gas) shall be installed underground. All utilities and utility laterals that will lie under new roads or new pavement must be in place prior to paving.

2. The Contractor shall coordinate with power, telephone, and cable TV companies for location of vaults, pedestals, etc. All above-grade facilities shall be placed in a location outside the proposed sidewalk or gravel shoulder/ditch area.

3. Power, telephone, and cable service conduits shall be installed per utility company requirements with pull wire. The Contractor shall verify with utility company for size and type of conduit prior to construction. All changes in direction of utility conduit runs shall have long radius steel bends.

4. The Contractor shall notify and coordinate with utilities for relocation of power poles, vaults, etc.

VII. STREET LIGHTS

1. Street lights shall be installed after all other earthwork and public utility installations are completed and after rough grading of the property is accomplished to prevent damage to the poles.

2. Street light poles shall be set to a depth as specified by the manufacturer, but not less than five feet (5').

3. Street light poles shall be installed within one degree (1°) of plumb.

IX. SITE CONDITIONS

1. Paved roads shall be kept clean of dirt and debris. Flushing the pavement shall be used to control dust. Any dirtied pavement shall be flushed clean at the end of each workday.

2. Any failure in the proper and timely restoration or maintenance of the existing County road surface, the roadside, and/or vegetation, shall be cause for Marion County to make or have made the restorations at the permitee's expense.

3. Cuts in existing County roads require a hard surface in the travel lane and turn radius when the road is open to traffic. Hard surfaces include non-compressible backfill, "cold mix" patch, steel plates, or the permanent restoration of the pavement as required in the permit. The permanent surface shall be constructed as soon as possible.

4. Trenches and pits within ten feet (10') of the travel lane must be backfilled or steel plated when the lane is open to night traffic. During daylight hours, cone and barricades are required.

5. No construction related equipment or materials should be stored on the existing county road or shoulder, including rock piles, pre-cast structures, pipe, portable toilets, etc.

6. Any equipment causing pavement damage to a County road shall immediately cease work and be removed from the road. Marked pavement may require blanket inlay restoration as directed by the County Engineer.

NO.	DATE	DESCRIPTION	BY
—		REVISIONS	

VERIFY SCALE
BAR IS ONE INCH ON ORIGINAL DRAWING
0 1"
IF NOT ONE INCH ON THIS SHEET, ADJUST SCALES ACCORDINGLY

DSN. JW
DRN. AK
CKD. JW
DATE: 06/2022

REGISTERED PROFESSIONAL ENGINEER
WILLIAM J. WELLS
OREGON
REVIEW
RENEWS: 6/30/2024

WESTECH ENGINEERING, INC.
CONSULTING ENGINEERS AND PLANNERS
3841 Fairview Industrial Dr. S.E., Suite 100, Salem, OR 97302
Phone: (503) 585-2474 Fax: (503) 585-3986
E-mail: westech@westech-eng.com

CLUTCH INDUSTRIES
BLOSSOM APARTMENTS

MARION COUNTY
CONSTRUCTION NOTES

DRAWING
C6.2

JOB NUMBER
3366.0000.0

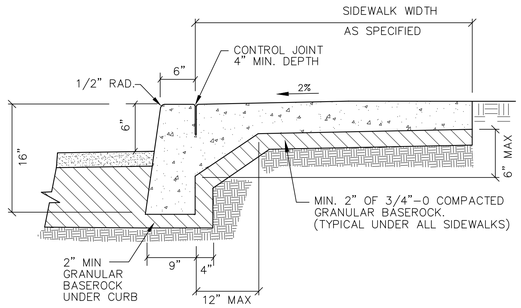

TYPICAL SECTION

NTS

NOTES:

1. CONCRETE DEPTH FOR STANDARD SIDEWALKS SHALL BE 4" MIN.
2. CONCRETE SHALL BE 3300 PSI @ 28 DAYS.
3. INSTALL TOOLED CONTRACTION JOINTS AT 5' INTERVALS. SIDEWALKS 10' & WIDER SHALL HAVE A LONGITUDINAL CONTRACTION JOINT AT 5' ON CENTER.
4. INSTALL MIN. 2 WEEP HOLES ON ALL LOTS. ONE WEEP HOLE TO BE AT LOW POINT OF LOT, 5' FROM P/L. A CONTRACTION JOINT SHALL BE PLACED ALONG AND OVER WEEPHOLE & DRAIN PIPE
5. PUBLIC SIDEWALKS SHALL BE LOCATED ENTIRELY WITHIN RIGHT-OF-WAYS OR SIDEWALK EASEMENTS, INCLUDING SIDEWALKS AT DRIVEWAY APRONS.

LAST REVISION DATE:	JO #
JAN 2000	STANDARD

MONOLITHIC CURB AND SIDEWALK

(NTS)

WESTECH ENG. — DETAIL NO. 2111

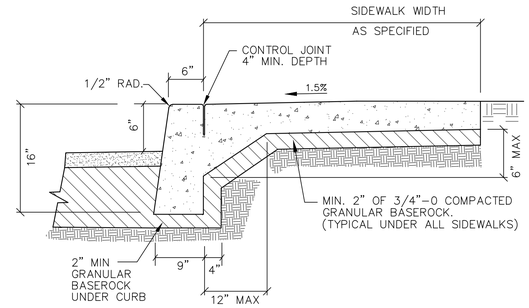

TYPICAL SECTION

NTS

NOTES:

1. CONCRETE DEPTH FOR STANDARD SIDEWALKS SHALL BE 4" MIN.
2. CONCRETE SHALL BE 3300 PSI @ 28 DAYS, MAX 5" SLUMP, 4.5% AIR (±1.5%).
3. INSTALL TOOLED CONTRACTION JOINTS AT 5' INTERVALS. SIDEWALKS 10' & WIDER SHALL HAVE A LONGITUDINAL CONTRACTION JOINT AT 5' ON CENTER.
4. INSTALL MIN. 2 WEEP HOLES ON ALL LOTS. ONE WEEP HOLE TO BE AT LOW POINT OF LOT, 5' FROM P/L. A CONTRACTION JOINT SHALL BE PLACED ALONG AND OVER WEEPHOLE & DRAIN PIPE.
5. PUBLIC SIDEWALKS SHALL BE LOCATED ENTIRELY WITHIN RIGHT-OF-WAYS OR SIDEWALK EASEMENTS, INCLUDING SIDEWALKS AT DRIVEWAY APRONS.

LAST REVISION DATE:	JO #
AUG 2020	STANDARD

MONOLITHIC CURB AND SIDEWALK

(NTS)

WESTECH ENG. — DETAIL NO. 2112

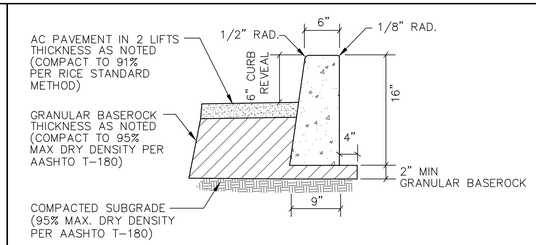

PAVEMENT & BASEROCK SECTIONS:

SEE PLAN

PAVEMENT/TYPE "C" CURB DETAIL

NTS

NOTES:

1. SEE GRADING PLAN FOR LOCATION OF LIGHT AND HEAVY DUTY PAVEMENT.
2. DESIGN SUBGRADES SHALL BE COMPACTED AND PROOF-ROLLED PRIOR TO PLACEMENT OF BASEROCK. IF SUBGRADE PASSES PROOF-ROLL BUT FAILS DENSITY TESTING, MIN. 4.5 OZ NON-WOVEN GEOTEXTILE FABRIC SHALL BE PLACED ON SUBGRADE PRIOR TO PLACEMENT OF BASEROCK. FAILURE OF PROOF-ROLL WILL REQUIRE OVEREXCAVATION.
3. IF SUBGRADE FAILS THE PROOF-ROLL, SUBGRADE SHALL BE OVEREXCAVATED TO UNDISTURBED SOIL AND BACKFILLED WITH BASEROCK OVER MIN. 8.0-OZ. NON-WOVEN FABRIC AS REQUIRED TO ALLOW COMPACTION OF UPPER (DESIGN) BASEROCK SECTION AND TO MAINTAIN STRUCTURAL INTEGRITY OF NATIVE SUBGRADE SOILS. TYPICAL MIN. OVEREXCAVATION REQUIRED IS 12-INCHES. NO RUBBER TIRED EQUIPMENT ALLOWED ON SUBGRADE FOLLOWING OVEREXCAVATION.
4. SUBGRADE TO BE PROOFROLLED IMMEDIATELY PRIOR TO PLACING BASEROCK. BASEROCK TO BE PROOFROLLED IMMEDIATELY PRIOR TO PAVING.
5. CONTRACTION JOINTS SHALL BE PLACED AT 15' MIN. INTERVALS AND SHALL EXTEND AT LEAST 50% THROUGH THE CURB SECTION.
6. ALL CONCRETE SHALL BE 3300 PSI @ 28 DAYS, MAX 5" SLUMP, 4.5% AIR (±1.5%).
7. CURBS TO CURE A MINIMUM OF 7 DAYS PRIOR TO PLACING FINAL BASEROCK AND PAVING. USE TYPE 1 OR 1-D CLEAR CURING COMPOUND.

LAST REVISION DATE:	JO #
AUG 2020	X

PAVEMENT AND TYPE 'C' CURB DETAIL

(NTS)

WESTECH ENG. — DETAIL NO. 2390

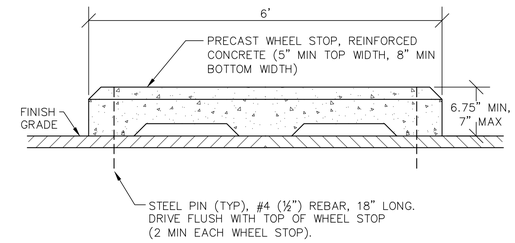

SECTION

NTS

NOTES:

1. SEE DRAWINGS FOR LOCATION & NUMBER OF WHEEL STOPS, INCLUDING DIMENSION FROM CURB, EDGE OF PAVEMENT OR BUILDING AS APPLICABLE.
2. UNLESS OTHERWISE SPECIFIED OR SHOWN ON SITE PLAN, SET WHEEL STOPS 2 FEET FROM FACE OF CURB OR EDGE OF PAVEMENT, MEASURED FROM THE FACE OF THE WHEEL STOP (VEHICLE SIDE) TO FACE OF CURB (OR EDGE OF PAVEMENT). SET BACK FROM PROPERTY LINES PER CITY STANDARDS (3' MIN). MIN SETBACK FROM BUILDINGS AS SHOWN ON DWGS.
3. FOR USE ON HEAD-IN PARKING WITHOUT FULL HEIGHT CURBS, OR WHERE A SIDEWALK ALONG HEAD-IN PARKING IS LESS THAN 6 FEET WIDE.

LAST REVISION DATE:	JO #
FEB 2013	STANDARD

PRECAST WHEELSTOP DETAIL

(NTS)

WESTECH ENG. — DETAIL NO. 2396

TRENCH COMPACTION: CLASS 1 GRANULAR BACKFILL – 92% OPTIMUM PER AASHTO T-180 (MODIFIED PROCTOR)
CLASS 3 NATIVE BACKFILL – 85% OPTIMUM PER AASHTO T-180

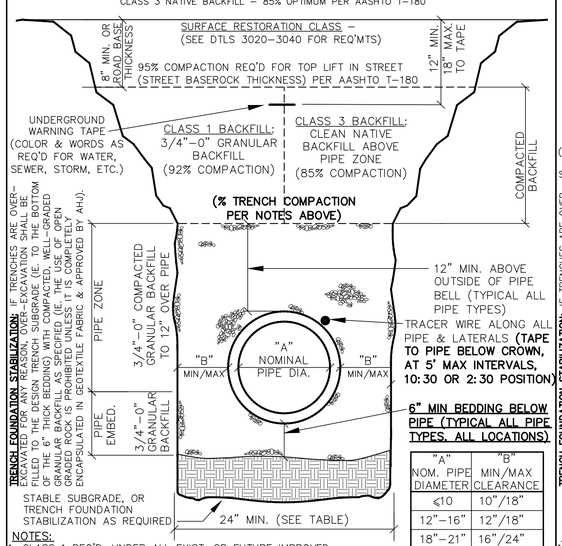

"A" NOM. PIPE DIAMETER	"B" MIN/MAX CLEARANCE
≤10	10"/18"
12"-16"	12"/18"
18"-21"	16"/24"
24"-30"	18"/30"
>30"	24"/36"

(SEE NOTE 4)

NOTES:

1. CLASS 1 REQ'D. UNDER ALL EXIST. OR FUTURE IMPROVED AREAS INCLUDING SIDEWALKS.
2. WHERE NEW PIPING IS IN SAME ALIGNMENT AS EXISTING PIPING, THE PIPE EMBEDMENT SHALL EXTEND TO A MIN. OF 6" BELOW THE NEW PIPING OR 6" BELOW EXISTING PIPING, WHICHEVER IS DEEPER.
3. FOR FLEXIBLE PIPE, BOTTOM OF TRENCH SHORING SHALL BE ABOVE PIPE SPRINGLINE PRIOR TO COMPACTING BACKFILL BELOW THE PIPE SPRINGLINE AND UNDER THE PIPE HAUNCHES.
4. MINIMUM CLEARANCES SHOWN ("B") ASSUMES STANDARD 6" WALL TRENCH BOXES SET ON TRENCH BOTTOM, AND REPRESENTS WIDTH REQUIRED TO CONSOLIDATE GRANULAR MATERIAL UNDER PIPE HAUNCHES (TO AVOID LOSS OF SIDE SUPPORT WHEN TRENCH BOX IS MOVED OR PULLED FORWARD). TRENCH WIDTH REDUCTION REQUIRES PRIOR APPROVAL BASED ON ACTUAL TRENCH SHORING PROPOSED.

LAST REVISION DATE:	JO #
FEB 2020	STANDARD

TRENCH BACKFILL, BEDDING, AND PIPE ZONE

(NTS)

WESTECH ENG. — DETAIL NO. 3010

TRENCH COMPACTION: CLASS 1 – 92% OPTIMUM PER AASHTO T-180 (MODIFIED PROCTOR)
CLASS 3 – 85% OPTIMUM PER AASHTO T-180

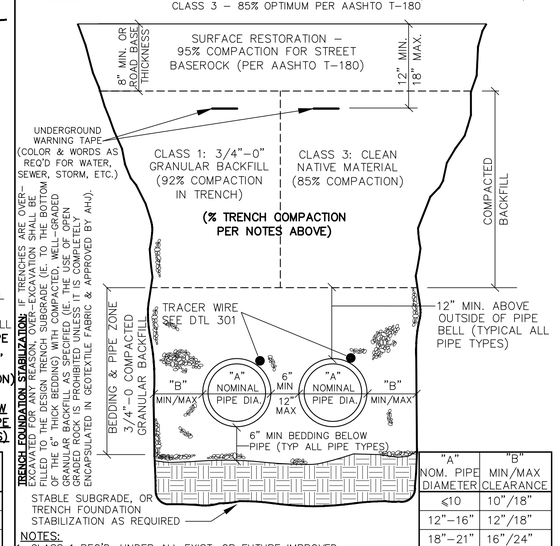

"A" NOM. PIPE DIAMETER	"B" MIN/MAX CLEARANCE
≤10	10"/18"
12"-16"	12"/18"
18"-21"	16"/24"
24"-30"	18"/30"
>30"	24"/36"

(SEE NOTE 4)

NOTES:

1. CLASS 1 REQ'D. UNDER ALL EXIST. OR FUTURE IMPROVED AREAS INCLUDING SIDEWALKS.
2. WHERE NEW PIPING IS IN SAME ALIGNMENT AS EXISTING PIPING, THE PIPE EMBEDMENT SHALL EXTEND TO A MIN. OF 6" BELOW THE NEW PIPING OR 6" BELOW EXISTING PIPING, WHICHEVER IS DEEPER.
3. FOR FLEXIBLE PIPE, BOTTOM OF TRENCH SHORING SHALL BE ABOVE PIPE SPRINGLINE PRIOR TO COMPACTING BACKFILL BELOW THE PIPE SPRINGLINE AND UNDER THE PIPE HAUNCHES.
4. MINIMUM CLEARANCES SHOWN ("B") ASSUMES STANDARD 6" WALL TRENCH BOXES SET ON TRENCH BOTTOM, AND REPRESENTS WIDTH REQUIRED TO CONSOLIDATE GRANULAR MATERIAL UNDER PIPE HAUNCHES (TO AVOID LOSS OF SIDE SUPPORT WHEN TRENCH BOX IS MOVED OR PULLED FORWARD). TRENCH WIDTH REDUCTION REQUIRES PRIOR APPROVAL BASED ON ACTUAL TRENCH SHORING PROPOSED.

LAST REVISION DATE:	JO #
JAN 2020	STANDARD

MULTIPLE PIPE TRENCH BEDDING, PIPE ZONE & BACKFILL

(NTS)

WESTECH ENG. — DETAIL NO. 3011

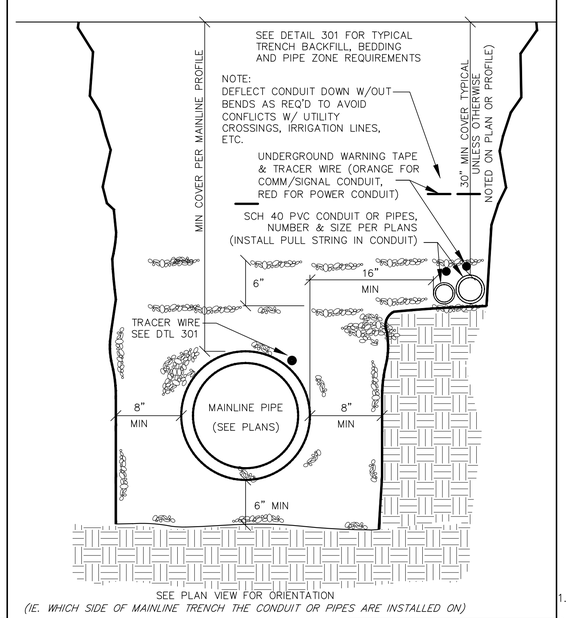

(IE. WHICH SIDE OF MAINLINE TRENCH THE CONDUIT OR PIPES ARE INSTALLED ON)

NOTES:

1. SEE PLANS AND/OR NOTES REGARDING SIZE AND TYPE OF CONDUIT OR PIPES REQUIRED.
2. CONTRACTOR SHALL INSTALL LONG SWEEP BENDS AT ANY DIRECTION CHANGES IN CONDUITS, PER NEC REQUIREMENTS.
3. CONTRACTOR SHALL INSTALL PULL BOXES AT INTERVALS REQUIRED BY THE NEC, AT LOCATIONS ACCEPTABLE TO THE OWNER.

LAST REVISION DATE:	JO #
JAN 2020	STANDARD

CONDUIT LOCATION ALONG MAINLINE PIPE TRENCH TYPICAL SECTION

(NTS)

WESTECH ENG. — DETAIL NO. 3012

PLACE 4" MIN. THICKNESS, CL.'C' A.C. IN TWO EQUAL LIFTS, OR THICKNESS OF REMOVED PAVEMENT, WHICHEVER IS GREATER, TO 91% OPT. DENSITY PER RICE STD. METHOD.

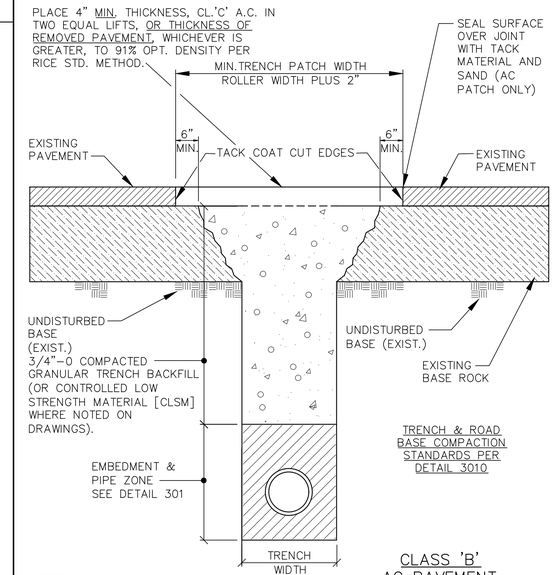

CLASS 'B' AC PAVEMENT RESTORATION

NOTES:

1. ALL EXISTING AC OR PCC PAVEMENT SHALL BE SAWCUT PRIOR TO REPAVING.
2. PCC CONCRETE PAVEMENT SHALL BE REPLACED WITH 3300 PSI PCC TO A MINIMUM THICKNESS OF 6" OR TO THE THICKNESS OF REMOVED CONCRETE, WHICHEVER IS GREATER.
3. FOR PAVED DRIVEWAYS (EXCEPT COMMERCIAL OR INDUSTRIAL) WITH LESS THAN 4" EXISTING AC, PAVEMENT THICKNESS MAY BE REDUCED TO 3" AC IN 2 LIFTS, AND OVERCUT MAY BE REDUCED TO 3" EACH SIDE.

LAST REVISION DATE:	JO #
DEC 2015	STANDARD

STREET CUT SURFACE RESTORATION

(NTS)

WESTECH ENG. — DETAIL NO. 3020

NO.	DATE	DESCRIPTION	BY
		REVISIONS	

VERIFY SCALE
BAR IS ONE INCH ON ORIGINAL DRAWING
0 1"
IF NOT ONE INCH ON THIS SHEET, ADJUST SCALES ACCORDINGLY

DSGN. JW
DRN. AK
CKD. JW
DATE: 06/2022

REGISTERED PROFESSIONAL ENGINEER — WILLIAM J. WELLS — 90909 — OREGON
REVIEW
RENEWS: 6/30/2024

WESTECH ENGINEERING, INC.
CONSULTING ENGINEERS AND PLANNERS
3841 Fairview Industrial Dr. S.E., Suite 100, Salem, OR 97302
Phone: (503) 585-2474 Fax: (503) 585-3986
E-mail: westech@westech-eng.com

CLUTCH INDUSTRIES
BLOSSOM APARTMENTS

WESTECH DETAILS

DRAWING
C7.0

JOB NUMBER
3366.0000.0

11/28/2022 6:51:54 AM
C:\Users\CAD\Desktop\Work (PC)\Projects\Clutch Industries\Blossom\Civil\Plots\C7.0 - Details.dwg, (C7.0 tab)

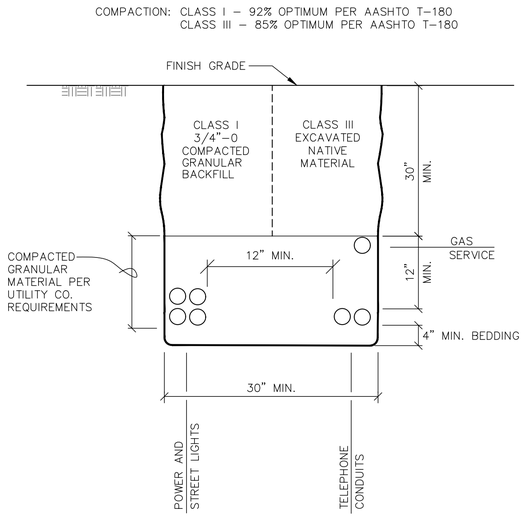

NOTES:

1. SEE UTILITY PLAN FOR LOCATION, ALIGNMENT, SIZE AND NUMBER OF CONDUITS.
2. CONTRACTOR SHALL COORDINATE WITH LOCAL UTILITY COMPANY REPRESENTATIVES AS REQ'D.

LAST REVISION DATE: APR 2004	JO #: STANDARD

PRIVATE COMMON UTILITY TRENCH DETAIL

(NTS)

WESTECH ENG. — DETAIL NO. 3060

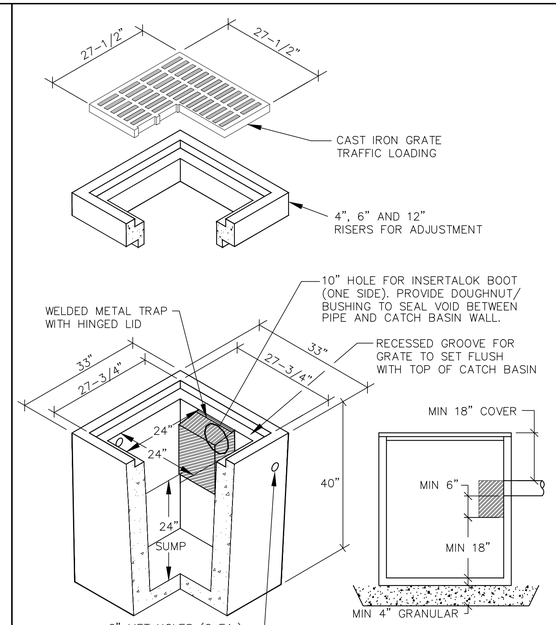

NOTES:

1. SEE CONSTRUCTION DRAWINGS FOR PIPE SIZE, LOCATION AND INVERT ELEVATION.
2. CONCRETE SHALL BE 4000 PSI @ 28 DAYS.
3. REBAR SHALL CONFORM TO ASTM A615 GRADE 60.
4. REBAR SHALL BE MIN. #4 BARS @ 6" C.C.
5. SET CB SQUARE WITH BUILDINGS OR WITH EDGE OF PARKING LOT OR DRIVEWAY WHEREIN IT LIES.
6. ADJUST PAVING SO WATER FLOWS TO CB WITH NO PONDING.

LAST REVISION DATE: NOV 2018	JO #: STANDARD

PARKING LOT CATCH BASIN (PRECAST CONCRETE)

(NTS)

WESTECH ENG. — DETAIL NO. 3150

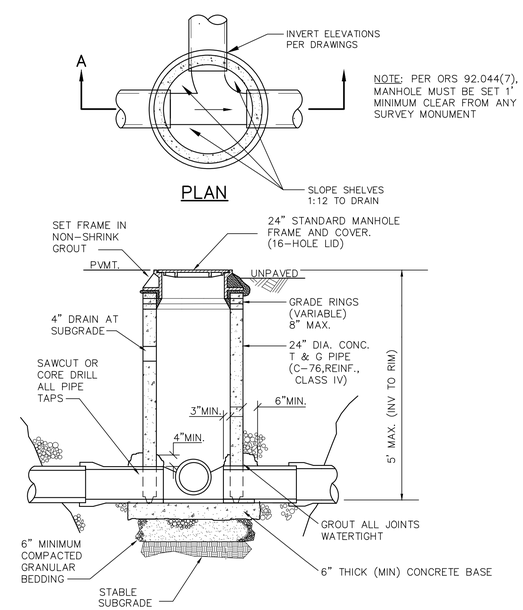

SECTION A–A

NOTE:

1. MAXIMUM PIPE NUMBER & DIAMETERS AS FOLLOWS:
   12" DIAMETER OR LESS – 4 MAXIMUM.
   15" DIAMETER – 2 MAXIMUM.
   ALL OTHER CONFIGURATIONS REQUIRE STANDARD MANHOLE.

LAST REVISION DATE: MAR 2008	STANDARD

24" DIA. STORM MANHOLE

(NTS)

WESTECH ENG. — DETAIL NO. 3500

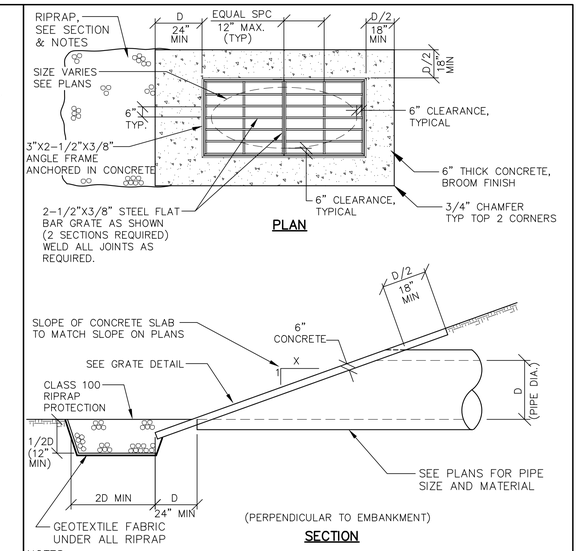

NOTES:

1. SEE CONSTRUCTION DRAWINGS FOR PIPE SIZE, LOCATION AND INVERT ELEVATION.
2. FRAME & GRATE SHALL BE ASTM A36 STEEL, HOT DIP GALVANIZED AFTER FABRICATION.
3. ALL CONCRETE TO BE 3300 PSI AT 28 DAYS, MAX 5" SLUMP, 4.5% AIR (±1.5%).
4. GRATED CONFIGURATION SHOWN IS TYPICALLY USED WHERE OUTFALL PIPE DISCHARGES THROUGH EMBANKMENT PERPENDICULAR TO THE DRAINAGE CHANNEL, AND WHERE REQUIRED TO ACCOMMODATE BANK MOWING EQUIP.
5. USE NON-GRATED CONFIGURATION WHERE APPROVED BY PUBLIC WORKS DIRECTOR.
6. ARMORING OF FAR CHANNEL BANK (TO BANK TOP) IS REQUIRED UNLESS NO EROSION POTENTIAL EXISTS (AS DETERMINED BY CITY). ARMOR BOTTOM & BANK 10 FEET MINIMUM IN EACH DIRECTION FROM OUTFALL CENTERLINE, UNLESS FURTHER SHOWN ON DWGS.
7. FILL ALL VOIDS IN RIP-RAP WITH 3/4"-0 GRANULAR BASEROCK.

LAST REVISION DATE: SEPT 2021	JO #: STD

CONCRETE PIPE END CAP WITH GRATE

(NTS)

WESTECH ENG. — DETAIL NO. 3620

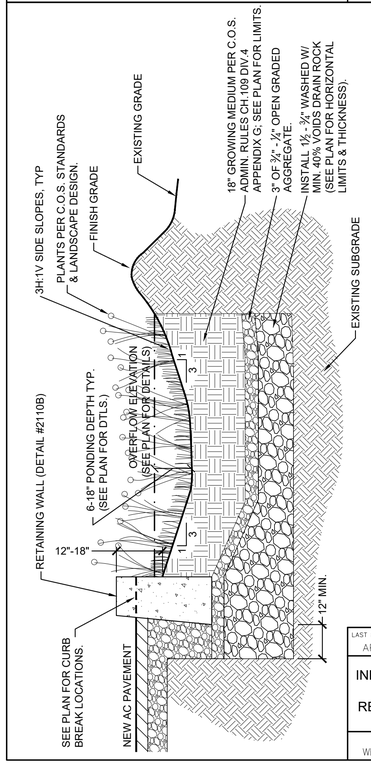

NOTES:

1. SCARIFY EXISTING SUBGRADE FOLLOWING THE INITIAL EXCAVATION & BEFORE INSTALLING ROCK OR GROWING MEDIUM.
2. PRIOR TO INSTALLATION OF GROWING MEDIUM CONTRACTOR TO SUBMIT SIEVE ANALYSIS, VERIFY & TEST GROWING MEDIUM FOR MIN. 4"/HR INFILTRATION, AND SUBMIT RESULTS TO ENGINEER.

INFILTRATION STORMWATER PLANTERS WITH RETAINING WALL AND BERM

N.T.S.

LAST REVISION DATE: APR 2014	STANDARD

INFILTRATION STORMWATER PLANTERS WITH RETAINING WALL AND BERM

(NTS)

WESTECH ENG. — DETAIL NO. 3740

NOTE: PER ORS 92.044(7), MANHOLE MUST BE SET 1' MINIMUM CLEAR FROM ANY SURVEY MONUMENT

PROVIDE GASKETED PVC CAP ON ALL STUBS FOR FUTURE CONNECTION SHOWN ON DWGS (EXTEND PIPE 2' MIN BEYOND MH WALL), SLOPE PER DWGS.

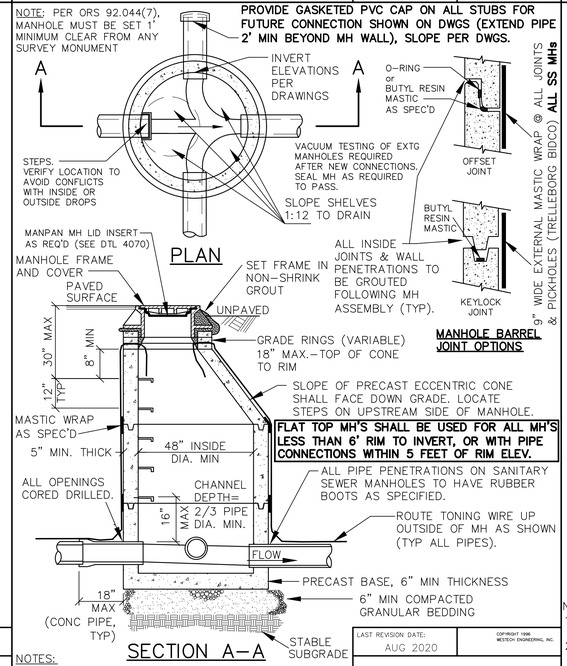

NOTES:

1. PRECAST SECTIONS SHALL MEET OR EXCEED ASTM C-478. ALL CHANNELS & GROUTING TO BE SMOOTH.
2. WATERTIGHT O-RING OR MASTIC JOINTS REQUIRED, W/EXTERNAL SEAL AT BARREL JOINTS & PICKHOLES.
3. STEPS TO BE POLYPROPYLENE PLASTIC WITH GRADE 60 REINFORCING ROD. ADD STEPS TO EXTG CONNECTION MH IF EXTG STEPS ARE ABSENT.

LAST REVISION DATE: AUG 2020	COPYRIGHT 1996 WESTECH ENGINEERING, INC.

STANDARD MANHOLE FOR 21" PIPE AND SMALLER (SEWER & STORM)

(NTS)

WESTECH ENG. — DETAIL NO. 4010

CLEANOUT COVERS: ALL SEWER CLEANOUT LIDS TO READ "SEWER".
ALL STORM CLEANOUT LIDS TO READ "STORM" OR "C/O".

1. NON-TRAFFIC AREAS:
   CARSON MODEL 910 T-COVER OR EQUAL (GREEN FOR SEWER, GREY FOR STORM).
2. TRAFFIC AREAS, INCLUDING DRIVEWAYS:
   8" X 4" CAST IRON FRAME & COVER, OLYMPIC M1007 OR EQUAL.
   8" X 6" CAST IRON FRAME & COVER, OLYMPIC M1018 OR EQUAL.
   (FOR CI CLEANOUTS IN UNPAVED AREAS, SET IN 6" THICK CONCRETE PAD)

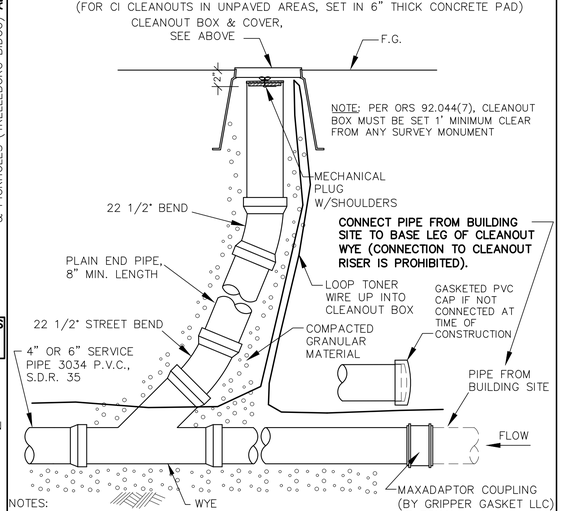

NOTES:

1. CLEANOUT RISER SHALL BE SAME SIZE AND MATERIAL AS LATERAL PIPE.
2. PROVIDE CONCRETE PAD FOR CLEANOUTS LOCATED IN UNPAVED DRIVEWAYS OR TRAFFIC AREAS (6" THICK PAD TO BE 6" LARGER THAN CLEANOUT BOX FRAME).
3. CLEANOUT PIPE SHALL BE LEFT A MINIMUM OF 18" ABOVE EXISTING GRADE UNTIL ALL CURBING IS INSTALLED AND ALL PRIVATE UTILITY TRENCHES ARE BACKFILLED. CLEANOUTS SHALL THEN BE SET NO MORE THAN 6" BELOW FINISH GRADE, AND CLEANOUT BOXES SET FLUSH WITH FINISH GRADE.

LAST REVISION DATE: OCT 2019	JO #: STANDARD

STANDARD SERVICE LATERAL CLEANOUT

(NTS)

WESTECH ENG. — DETAIL NO. 4161

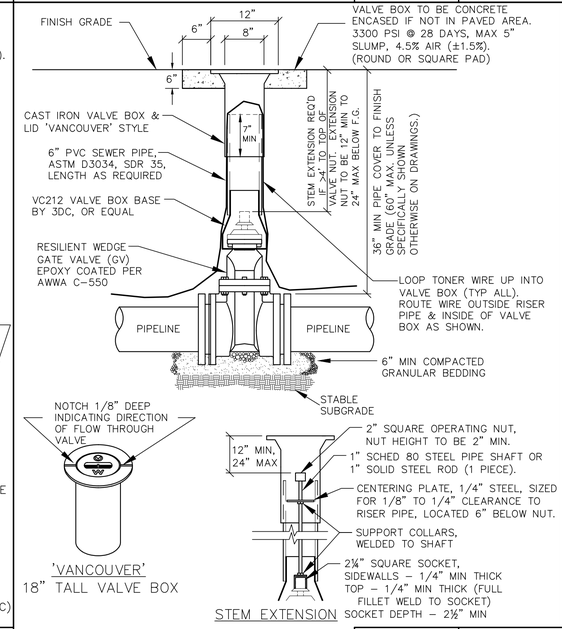

NOTES:

1. GV SHALL CONFORM TO AWWA C-509.
2. VALVE BOXES SHALL BE PLUMB AND CENTERED DIRECTLY OVER THE VALVE NUT.
3. VALVE BOX TOP SHALL BE ADJUSTED TO FINISHED GRADE.
4. PVC SHALL BE ONE CONTINUOUS PIECE, NO BELLS OR COUPLERS.
5. VALVE BOXES ON PRESSURE SEWERS TO READ "S" OR "SEWER".

LAST REVISION DATE: AUG 2020	JO #: STANDARD

GATE VALVE AND VALVE BOX DETAIL

(NTS)

WESTECH ENG. — DETAIL NO. 5010

NO.	DATE	DESCRIPTION	BY
		REVISIONS	

VERIFY SCALE
BAR IS ONE INCH ON ORIGINAL DRAWING
0 1"
IF NOT ONE INCH ON THIS SHEET, ADJUST SCALES ACCORDINGLY

DSN. JW
DRN. AK
CKD. JW
DATE: 06/2022

REGISTERED PROFESSIONAL ENGINEER — WILLIAM T. WELLS — REVIEW — RENEWS: 6/30/2024

WESTECH ENGINEERING, INC.
CONSULTING ENGINEERS AND PLANNERS
3841 Fairview Industrial Dr. S.E., Suite 100, Salem, OR 97302
Phone: (503) 585-2474 Fax: (503) 585-3986
E-mail: westech@westech-eng.com

CLUTCH INDUSTRIES
BLOSSOM APARTMENTS

WESTECH DETAILS

DRAWING C7.1

JOB NUMBER 3366.0000.0

NOTE: HYDRANT COLOR TO CONFORM WITH LOCAL JURISDICTION REQUIREMENTS.

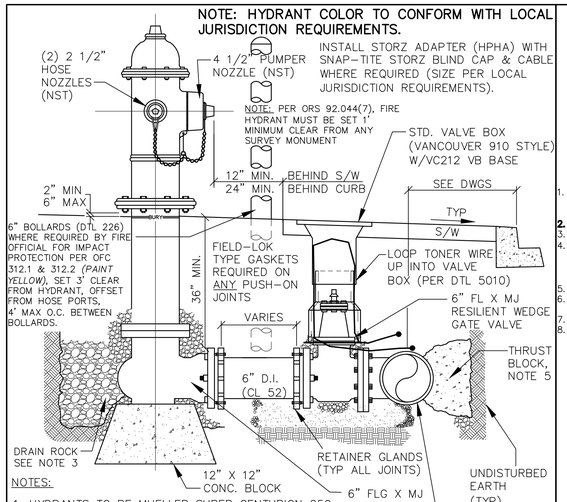

NOTES:

1. HYDRANTS TO BE MUELLER SUPER CENTURION 250, MODEL A-423 WITH FULL SIZE (5¼") FOOT VALVE.
2. **ALL FITTINGS IN CONTACT WITH CONCRETE SHALL BE WRAPPED IN PLASTIC.** HYDRANT DRAIN HOLES TO REMAIN OPEN TO DRAIN ROCK AND OPERATIONAL.
3. 1-1/2" TO 3/4" CLEAN DRAIN ROCK SHALL BE PLACED A MIN. OF 6" ABOVE DRAIN OUTLET.
4. WHERE PLANTER STRIP EXISTS, HYDRANT SHALL BE PLACED SO FRONT PORT IS A MIN. OF 24" BEHIND FACE OF CURB.
5. THRUST BLOCK AT STANDARD 6" FIRE HYDRANT TEE SHALL HAVE MIN. 3.7 SQ. FT. BEARING AREA.
6. ALL HYDRANTS SHALL BE SET PLUMB.
7. FOR HYDRANT LEADS LONGER THAN 30', AN ADDITIONAL GATE VALVE SHALL BE PROVIDED WITHIN 3 FT. OF THE HYDRANT.
8. RESTRAIN ALL JOINTS ON ALL HYDRANT LEADS. RETAINER GLANDS SHALL TO BE USED IN LEIU OF THRUST BLOCK BEHIND HYDRANT.
9. PAINT CURB YELLOW 10 FEET EACH WAY FROM HYDRANT & INSTALL REFLECTIVE BLUE TRAFFIC MARKER @ STREET CENTERLINE.

LAST REVISION DATE: NOV 2020	JO #: STANDARD
STANDARD FIRE HYDRANT ASSEMBLY (NTS)	
WESTECH ENG.	DETAIL NO. 5030

FITTING SIZE (Inches)	TEE, WYE, & ① HYDRANTS	90° BEND ② PLUGGED CROSS TEE PLUGGED-RUNS	45° BEND ③	22 1/2° BEND ④	11 1/4° BEND ⑤
2	*	*	*	*	*
4	1.7	2.4	1.3	*	*
6	3.7	5.3	2.9	1.5	*
8	6.7	9.5	5.1	2.7	1.3
10	10.5	14.8	8	4.1	2
12	15.1	21.3	11.6	5.9	2.9
16	26.8	37.9	20.5	10.4	5.2
18	33.9	47.9	25.9	12.8	6.7
LARGER	* *	* *	* *	* *	* *
BEARING AREA OF THRUST BLOCKS (sq. ft.)					

1. ALL VALUES ARE BASED ON THE FOLLOWING ASSUMPTIONS: AVG. PRESSURE = 100 PSI x 2 (safety factor); 1500 PSF SOIL BEARING CAPACITY; NORMAL DISTRIBUTION SYSTEM DESIGN VELOCITY NOT TO EXCEED 5 FPS.
2. **ALL FITTINGS SHALL BE WRAPPED IN PLASTIC PRIOR TO PLACEMENT OF CONCRETE.**
3. BEARING SURFACE OF THRUST BLOCKING SHALL BE AGAINST UNDISTURBED SOIL.
4. TRUCK-MIXED CONCRETE MIX SHALL HAVE A MIN. 28 DAY STRENGTH OF 3300 PSI (5" MAX SLUMP). USE OF HAND-MIXED SACK-CRETE TYPE CONCRETE REQUIRES WRITTEN CITY APPROVAL PRIOR TO USE, AND SHALL BE 4000 PSI MIX, MIXED WITH MIN AMOUNT OF WATER NECESSARY FOR WORKABILITY (5" MAX SLUMP). USE OF DRY SACK-CRETE MIX (BAGS OR LOOSE MIX) IS PROHIBITED FOR PERMANENT THRUST RESTRAINT.
5. ALL PIPE ZONES SHALL BE BACKFILLED WITH GRANULAR BACKFILL AND COMPACTED.
6. THRUST BLOCKS FOR PLUGGED CROSS AND PLUGGED TEE SHALL HAVE #4 REBAR LIFTING LOOPS INSTALLED AS SHOWN.
7. VERTICAL THRUST DETAILS-SEE DWG. 512.
8. STRADDLE BLOCK DETAILS-SEE DWG. 511.

* BLOCK TO UNDISTURBED TRENCH WALLS

* * THRUST BLOCKS FOR PIPES LARGER THAN 18" WILL BE INDIVIDUALLY DESIGNED BY THE ENGINEER.

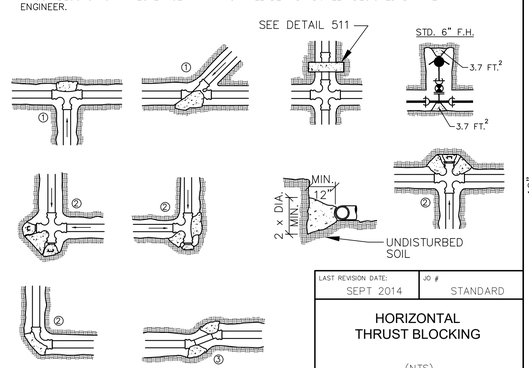

LAST REVISION DATE: SEPT 2014	JO #: STANDARD
HORIZONTAL THRUST BLOCKING (NTS)	
WESTECH ENG.	DETAIL NO. 5100

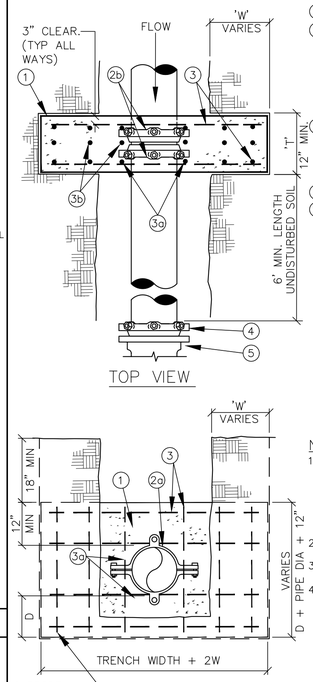

MATERIALS

1. CONCRETE STRADDLE BLOCK.
2. -EITHER **(2a)** ONE SERRATED-LOCK STYLE SPLIT-RING RESTRAINT HARNESS (ROMAC 600 OR EQUAL), OR **(2b)** TWO RETAINER GLAND WEDGE-STYLE RESTRAINTS, SET OPPOSED (EBBA MEGA-LUG OR EQUAL). **-WEDGE STYLE RESTRAINTS SHALL BE WRAPPED WITH PLASTIC PRIOR TO CONCRETE PLACEMENT.**
3. ≤12" PIPE, #4 REBAR @12" O.C. E.W., **(3a)** INSTALL REBAR EACH SIDE OF RESTRAINT FITTING INSIDE CONCRETE AS SHOWN. **(3b)** INSTALL 3 MATS OF REBAR FOR PIPE LARGER THAN 12" DIAMETER.
4. RETAINER GLAND, ON ADJACENT FITTING.
5. MJ FITTING, BEND, VALVE OR BLOWOFF.

PIPE SIZE	'W'	'D'	'T'
6"	12"	8"	12"
8"	16"	10"	12"
10"	20"	12"	12"
12"	24"	18"	18"
14"&16"	**28"**	**24"**	**18"**
18"	**32"**	**30"**	**18"**
>12"	**SIZE TO BE VERIFIED BY DESIGN ENG (NOTE 1).**		

NOTES:

1. STRADDLE BLOCKS FOR >12" PIPE SHALL BE VERIFIED INDIVUALLY FOR APPLICATION BY THE DESIGN ENGINEER AND SHALL BE BASED ON THE FOLLOWING:
   a.) 200 PSI WATER TEST PRESSURE.
   b.) SOIL BEARING CAPACITY, REBAR SIZE & SPACING VERIFIED BY THE ENGINEER.
2. BEARING AREA OF BLOCK SHALL BE AGAINST UNDISTURBED SOIL.
3. STRADDLE BLOCK SHALL HAVE A MINIMUM OF 18" COVER.
4. CONCRETE SHALL HAVE A MIN. 28 DAY STRENGTH OF 3300 PSI.

LAST REVISION DATE: DEC 2021	JO #: STANDARD
STRADDLE BLOCK FOR 12" AND SMALLER PIPE (NTS)	
WESTECH ENG.	DETAIL NO. 5110

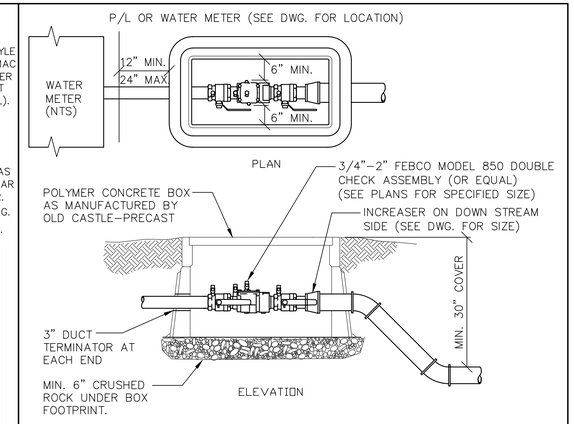

NOTES:

1. DCA- DOUBLE CHECK ASSEMBLY
2. DCA SHALL CONFORM TO REQUIREMENTS OF PUBLIC/PRIVATE AGENCIES HAVING JURISDICTION.
3. DCA & VAULT INSTALLATION SHALL MEET STATE OF OREGON, DEPARTMENT OF HUMAN RESOURCES, AND HEALTH DIVISION REQUIREMENTS.
4. CONTRACTOR SHALL HAVE DCA TESTED AND CERTIFIED PRIOR TO ACCEPTANCE BY OWNER.
5. VERIFY ADEQUATE CLEARANCES FOR TESTING AND REPAIR.
6. BRASS PLUGS SHALL BE INSTALLED IN TEST COCKS.
7. LOCK DOWN COVER WITH HEX HEAD BOLTS. COVER SHALL READ "WATER"
8. DCA SHALL NOT BE INSTALLED IN AREAS SUBJECT TO VEHICLE TRAFFIC AND PEDESTRIAN SIDEWALK AREAS.

DCA DIA.	BOX MODEL NO.	BOX NOMINAL DIMENSIONS AT TOP
3/4"	S1324B26AA	13" X 24" (26"D)
1"	S1324B26AA	13" X 24" (26"D)
1 1/2"	S1730B26AA	17" X 30" (26"D)
2"	S1730B26AA	17" X 30" (26"D)

LAST REVISION DATE: DEC 2004	JO #: STANDARD
2" AND SMALLER DOUBLE CHECK ASSEMBLY (NTS)	
WESTECH ENG.	DETAIL NO. 5310

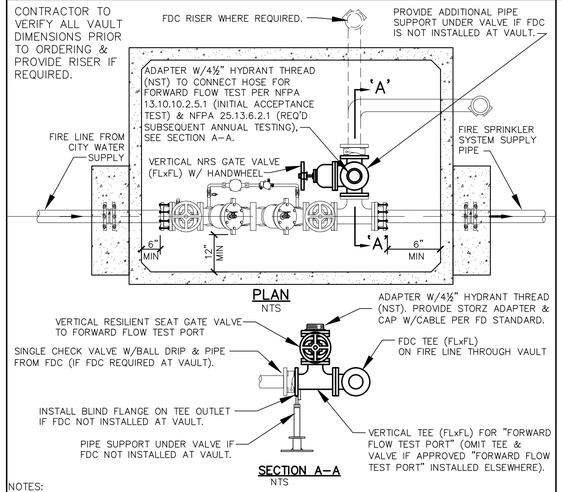

NOTES:

1. THE "FORWARD FLOW TEST PORT" SHALL BE INSTALLED IN THE DCDA VAULT AS SHOWN AND SPECIFIED BY THIS DETAIL, UNLESS AN ALTERNATE PERMANENT "FORWARD FLOW TEST PORT" LOCATION IS APPROVED IN WRITING BY THE OWNER'S REPRESENTATIVE AND AN AUTHORIZED FIRE DEPT REPRESENTATIVE, OR IF A PRIVATE FIRE HYDRANT DOWNSTREAM OF THE DCDA VAULT IS DESIGNATED AS THE REQUIRED "FORWARD FLOW TEST PORT".
2. CONTRACTOR IS RESPONSIBLE FOR COORDINATING WITH THE FIRE SPRINKLER SYSTEM DESIGNER/ INSTALLER TO VERIFY THE FLOWRATE REQUIRED FOR THE "FORWARD FLOW TEST" OF THE BACKFLOW DEVICE, AND SHALL COORDINATE TO ENSURE THAT ALL HOSE & FLOW MEASUREMENT EQUIPMENT (HOSE MONSTER OR EQUAL) IS PROVIDED AS REQUIRED TO CONDUCT THE ACCEPTANCE "FORWARD FLOW TEST" AS REQUIRED BY NFPA 13.10.10.2.5.1.
3. ALL COMPONENTS OF THE FORWARD FLOW TEST PORT (EXCLUDING THE FIRE HOSES & FLOW MEASUREMENT EQUIPMENT) SHALL REMAIN IN PLACE TO ALLOW SUBSEQUENT "FORWARD FLOW TESTS" TO BE CONDUCTED WITHOUT ANY SYSTEM MODIFICATIONS (IE. ANNUAL FLOW TESTS AS REQUIRED PER NFPA 25.13.6.2.1).
4. CONFORM TO ALL OTHER REQUIREMENTS OF APPLICABLE DOUBLE CHECK DETECTOR ASSEMBLY DETAIL(S), NOTES & SPECIFICATIONS.

LAST REVISION DATE: DEC 2018	JO #:
4" FORWARD FLOW TEST PORT INSIDE DCDA VAULT (FOR NFPA 13 & 25 TESTS) (NTS)	
WESTECH ENG.	DETAIL NO. 5590

NO.	DATE	DESCRIPTION	BY
		REVISIONS	

VERIFY SCALE
BAR IS ONE INCH ON ORIGINAL DRAWING
0 1"
IF NOT ONE INCH ON THIS SHEET, ADJUST SCALES ACCORDINGLY

DSN. JW
DRN. AK
CKD. JW
DATE: 06/2022

REGISTERED PROFESSIONAL ENGINEER
WILLIAM J. WELLS
OREGON
REVIEW
RENEWS: 6/30/2024

WESTECH ENGINEERING, INC.
CONSULTING ENGINEERS AND PLANNERS
3841 Fairview Industrial Dr. S.E., Suite 100, Salem, OR 97302
Phone: (503) 585-2474 Fax: (503) 585-3986
E-mail: westech@westech-eng.com

CLUTCH INDUSTRIES
BLOSSOM APARTMENTS

WESTECH DETAILS

DRAWING
C7.2

JOB NUMBER
3366.0000.0

NOTES:

1. DCA – DOUBLE CHECK VALVE ASSEMBLY.
2. DCA, VAULT & PIPING SHALL CONFORM TO REQUIREMENTS OF ALL PUBLIC/PRIVATE AGENCIES HAVING JURISDICTION. DCA & VAULT INSTALLATION SHALL MEET REQUIREMENTS OF OREGON HEALTH AUTHORITY, DRINKING WATER SERVICES (DWS).
3. DCA VAULT SHALL BE PLACED ON OUTSIDE OF RIGHT–OF–WAY UNLESS OTHERWISE APPROVED (RECORDED ACCESS EASEMENT TO THE CITY MAY BE REQUIRED FOR DCA VAULT ON PRIVATE PROPERTY).
4. ALL MATERIALS SHALL BE FURNISHED & INSTALLED BY THE CONTRACTOR. CONTRACTOR SHALL HAVE DCA TESTED AND CERTIFIED PRIOR TO ACCEPTANCE BY OWNER.
5. PIPING INSIDE VAULT & THROUGH WALLS TO BE AS NOTED ON DRAWINGS. BENDS, CROSSES AND TEES SHALL NOT BE INSTALLED WITHIN 5 FEET OF THE OUTSIDE VAULT WALL.
6. ALL VAULTS SHALL MEET OR EXCEED ASTM C–857. ALL VAULT CONCRETE TO BE 4500 PSI @ 28 DAYS. REBAR TO BE ASTM A–615 GRADE 60.
7. ALL PIPE OPENINGS SHALL BE CORE DRILLED (REGARDLESS OF PRESENCE OF 'KNOCKOUTS'), AND SEALED WATERTIGHT WITH NON–SHRINK GROUT.
8. ISOLATION VALVES IN METER VAULT SHALL BE RISING STEM GATE VALVE (EPOXY COATED) WITH HANDWHEEL OPERATOR.
9. METER VAULT TO BE UTILITY VAULT 687–WA OR APPROVED EQUAL, CONFORMING WITH ASTM C–857. PROVIDE ALUMINUM ANGLE FRAME HATCH (36"x 60" MIN) BY USF FABRICATION OR APPROVED EQUAL (HATCH COVER TOP TO BE SAND BLASTED NON–SLIP).
   (1) TO BE 300 PSF PEDESTRIAN RATED WHERE LID IS SET MIN. OF 9" ABOVE GRADE.
   (2) TO BE H–20 RATED IF LID IS LESS THAN 9" ABOVE GRADE, OR IF LOCATED IN TRAFFIC AREA.
10. DCA VAULT SHALL BE PROVIDED WITH AN OSHA APPROVED GALVANIZED STEEL LADDER AND ALUMINUM LADDER SAFETY EXTENSION. ATTACH TO VAULT WITH STAINLESS STEEL BOLTS.
11. CONTRACTOR TO INSTALL SUMP PUMP (5 GPM MIN) WITH 120V POWER SUPPLY, ALONG WITH PRIVATE POWER SOURCE (RESPONSIBILITY OF CONTRACTOR INSTALLING VAULT). SCHED 40 CONDUIT, WIRE, ETC. FOR SUMP PUMP POWER SHALL CONFORM WITH NEC REQUIREMENTS.
13. SUMP PUMP DISCHARGE PIPE SHALL BE 1½–INCH SCHEDULE 40 PVC, PROVIDED WITH UNION (FOR PUMP REMOVAL) CHECK VALVE AND ISOLATION BALL VALVE. CONNECT DISCHARGE TO GRAVITY STORM DRAIN OR CURB WEEP HOLE (AT LOCATION APPROVED BY PUBLIC WORKS).

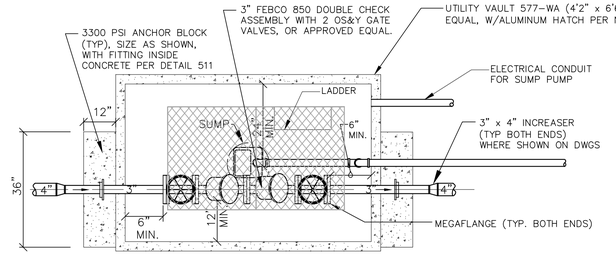

PLAN
NTS

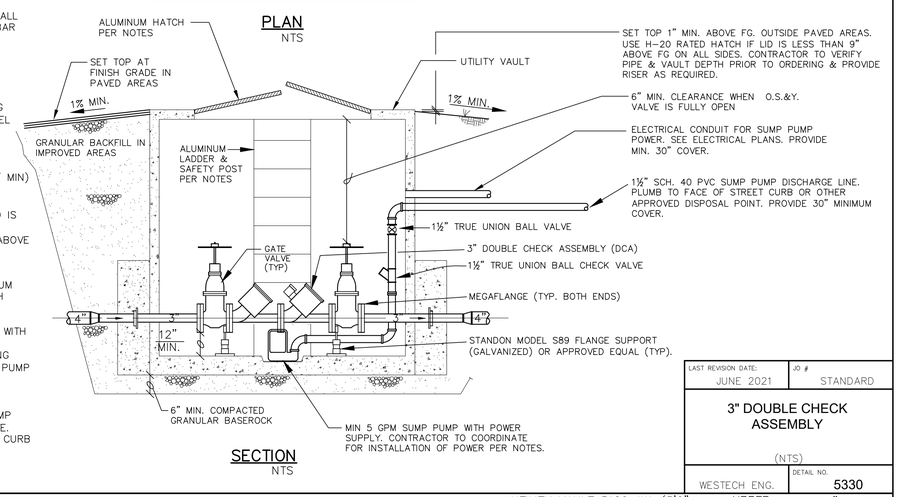

SECTION
NTS

LAST REVISION DATE: JUNE 2021	JO #: STANDARD
3" DOUBLE CHECK ASSEMBLY (NTS)	
WESTECH ENG.	DETAIL NO. 5330

8" FEBCO 856 DOUBLE CHECK DETECTOR ASSEMBLY WITH 2 OS&Y GATE VALVES, OR APPROVED EQUAL.

36" WIDE CAST–IN–PLACE CONCRETE THRUST COLLAR WITH RETAINER GLAND CENTERED IN CONCRETE (TYPICAL BOTH ENDS)

NOTES:

1. DCDA– DOUBLE CHECK DETECTOR ASSEMBLY FDC–FIRE DEPARTMENT CONNECTION.
2. DCDA SHALL CONFORM TO REQUIREMENTS OF PUBLIC/PRIVATE AGENCIES HAVING JURISDICTION.
3. DCDA & VAULT INSTALLATION SHALL MEET REQUIREMENTS OF OREGON HEALTH AUTHORITY, DRINKING WATER SERVICES (DWS).
4. CONTRACTOR SHALL HAVE DCDA TESTED AND CERTIFIED PRIOR TO ACCEPTANCE BY OWNER.
5. FDC SHALL NOT EXIT THROUGH THE TOP OF THE VAULT.
6. ALL PIPE OPENINGS SHALL BE SEALED WITH NON–SHRINK WATERTIGHT GROUT.
7. BENDS, CROSSES AND TEES SHALL NOT BE INSTALLED WITHIN 5 FEET OF THE OUTSIDE VAULT WALL.
8. ALL VAULTS SHALL MEET OR EXCEED ASTM C–857. ALL VAULT CONCRETE TO BE 4500 PSI @ 28 DAYS. REBAR TO BE ASTM A–615 GRADE 60.
9. SUMP PUMP WITH POWER SUPPLY SHALL BE INSTALLED UNLESS OTHERWISE APPROVED BY PUBLIC WORKS.
10. SUMP PUMP DISCHARGE PIPE TO BE 1½–INCH SCHED 40 PVC SHALL BE PLUMBED TO FACE OF STREET CURB OR OTHER DISPOSAL POINT APPROVED BY LOCAL JURISDICTION (SEE OAR 333–061–0071.3.f).
11. CONTRACTOR TO INSTALL SUMP PUMP (5 GPM MIN) WITH 120V POWER SUPPLY, ALONG WITH PRIVATE POWER SOURCE (RESPONSIBILITY OF CONTRACTOR INSTALLING VAULT). SCHED 40 CONDUIT, WIRE, ETC. FOR SUMP PUMP POWER SHALL CONFORM WITH NEC REQUIREMENTS.
12. THRUST COLLAR CONCRETE SHALL BE 3300 PSI @ 28 DAYS.
13. PROVIDE REMOTE READER (TOUCH READ HEAD) FOR DETECTOR LOOP METER PER LOCAL JURISDICTION REQUIREMENTS, MOUNTED ON HINGE EDGE OF HATCH.
14. ALUMINUM ANGLE FRAME HATCH (3'0"x 5'6" MIN) SHALL BE BY USF FABRICATION OR APPROVED EQUAL (SAND BLASTED NON–SLIP).
   (1) TO BE 300 PSF PEDESTRIAN RATED WHERE LID IS SET MIN. OF 9" ABOVE GRADE.
   (2) TO BE H–20 RATED IF LID IS LESS THAN 9" ABOVE GRADE, OR IF LOCATED IN TRAFFIC AREA.
15. OSHA APPROVED GALVANIZED STEEL LADDER & ALUMINUM LADDER SAFETY EXTENSION.
16. PER OFC 903.4, INSTALL APPROVED TAMPER SWITCH ON BOTH OS&Y VALVES IN VAULT, WIRED TO A LISTED FIRE ALARM CONTROL UNIT, UNLESS EXEMPTION IS GRANTED BY FIRE DEPT.

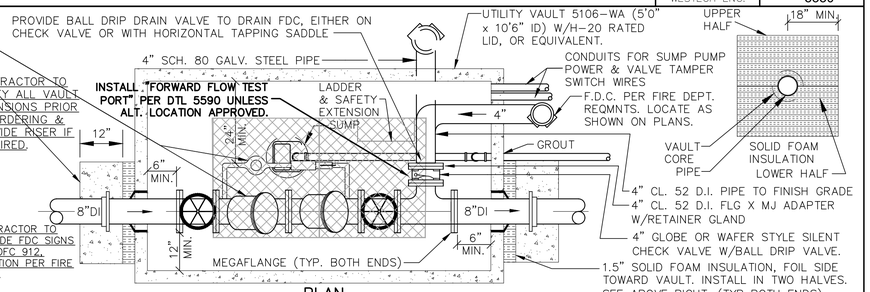

PLAN
NTS

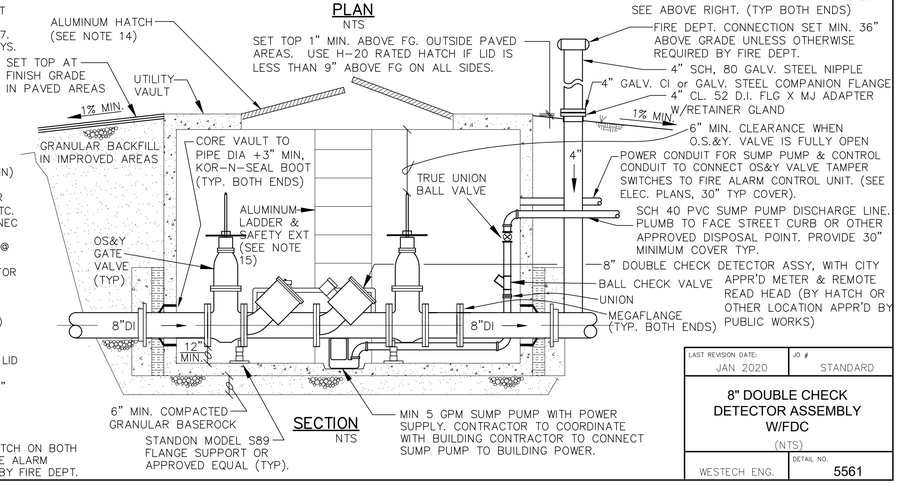

SECTION
NTS

LAST REVISION DATE: JAN 2020	JO #: STANDARD
8" DOUBLE CHECK DETECTOR ASSEMBLY W/FDC (NTS)	
WESTECH ENG.	DETAIL NO. 5561

NO.	DATE	DESCRIPTION	BY
—			

REVISIONS

VERIFY SCALE
BAR IS ONE INCH ON ORIGINAL DRAWING
0 1"
IF NOT ONE INCH ON THIS SHEET, ADJUST SCALES ACCORDINGLY

DSN. JW
DRN. AK
CKD. JW
DATE: 06/2022

REVIEW
REGISTERED PROFESSIONAL ENGINEER
WILLIAM J. WELLS
RENEWS: 6/30/2024

WESTECH ENGINEERING, INC.
CONSULTING ENGINEERS AND PLANNERS
3841 Fairview Industrial Dr. S.E., Suite 100, Salem, OR 97302
Phone: (503) 585–2474 Fax: (503) 585–3986
E–mail: westech@westech–eng.com

CLUTCH INDUSTRIES
BLOSSOM APARTMENTS

WESTECH DETAILS

DRAWING
C7.3

JOB NUMBER
3366.0000.0

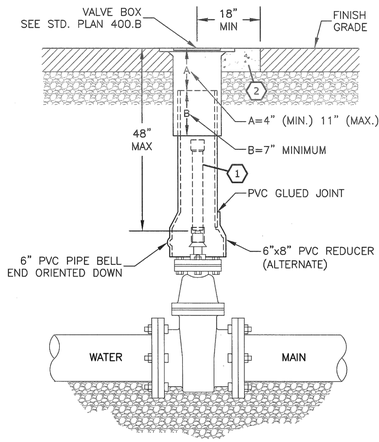

GENERAL NOTES

- CENTER VALVE BOX ASSEMBLY AND ALIGN VERTICALLY OVER VALVE OPERATING NUT.
- ADJUST VALVE BOX TO FINISH PAVING GRADE.
- PVC PIPE SHALL BE ONE CONTINUOUS PIECE WITH BELL END ORIENTED DOWNWARD, OR ALTERNATIVELY, GLUE PVC REDUCER ON PLAIN END OF PIPE.

KEYNOTES

1. PROVIDE VALVE OPERATOR EXTENSION WHEN OPERATING NUT DEPTH EXCEEDS 48-INCHES. SEE STD. PLAN 400.C
2. CONSTRUCT 6-INCH THICK P.C.C. COLLAR IF VALVE IS IN UNPAVED AREA SUBJECT TO VEHICULAR TRAFFIC.

CHANGES: ADDED PIPE BELL/REDUCER OPTION; REMOVED DETAIL ON VALVE BOX; ADDED WARRANT FOR OPERATOR EXTENSION

CITY OF SALEM
DEPARTMENT OF PUBLIC WORKS

STANDARD PLAN
WATER VALVE BOX ASSEMBLY

APPROVED — CITY ENGINEER — 3-1-16

DRAWN BY JAK 2016
CHECKED BY DEW 2016

NO.400.A

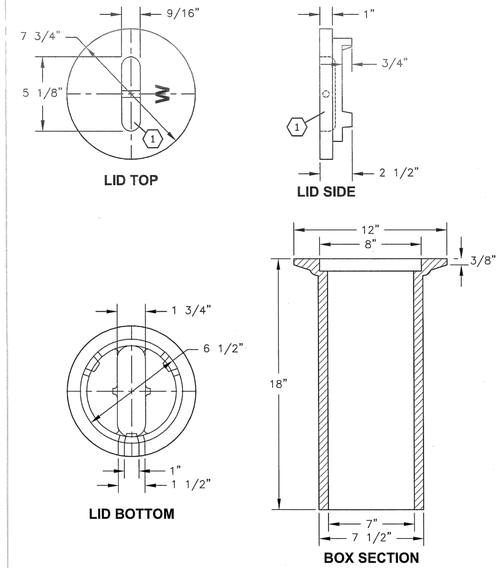

SPECIFICATION:
WATER VALVE BOX MATERIAL SHALL BE CAST IRON ASTM A48, CL35.

1. LIFT POCKET 1" WIDE x 1 1/4" DEEP.

CHANGES: NEW DRAWING; CHANGED TO CLASS 35 CAST IRON

CITY OF SALEM
DEPARTMENT OF PUBLIC WORKS

STANDARD PLAN
WATER VALVE BOX

APPROVED — CITY ENGINEER — 3-1-16

DRAWN BY JAK 2016
CHECKED BY DEW 2016

NO.400.B

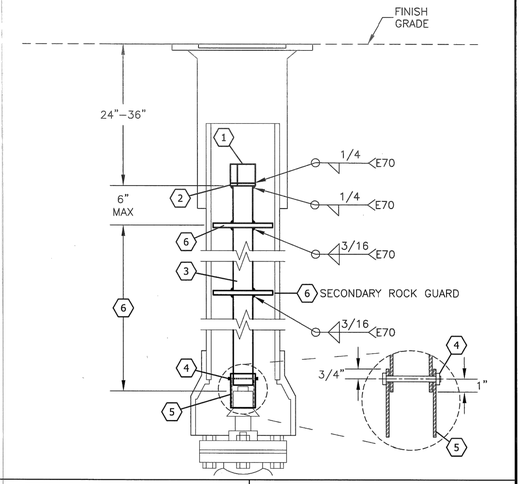

KEYNOTES

1. 2"x2"x1/8"x2" LONG STEEL TUBE. EXTEND TO 24"-36" FROM FINISH GRADE.
2. 2"x2"x3/8" STEEL FLAT BAR.
3. 1 1/2" SCHEDULE 40 STEEL PIPE (1.90 OD x .145 WALL).
4. 3/8" BOLT WITH LOCK NUT.
5. 2 1/2"x2 1/2"x3/16"x3 1/2"" LONG STEEL TUBE.
6. ROCK GUARD. 1/8" STEEL PLATE. WELDED TO STEEL PIPE. INSTALL 6" MAX BELOW OPERATOR NUT. ROCK GUARD DIAMETER SHALL BE 5 1/2". SECONDARY ROCK GUARD IS REQUIRED IF DISTANCE FROM UPPER ROCK GUARD TO VALVE NUT EXCEEDS 72". INSTALL SECONDARY ROCK GUARD HALFWAY BETWEEN UPPER GUARD AND VALVE NUT.

CHANGES: NEW DRAWING

CITY OF SALEM
DEPARTMENT OF PUBLIC WORKS

STANDARD PLAN
WATER VALVE OPERATOR EXTENSION

APPROVED — CITY ENGINEER — 3-1-16

DRAWN BY JAK 2016
CHECKED BY DEW 2016

NO.400.C

(HORIZONTAL)
BEARING AREA OF THRUST BLOCKS
IN SQUARE FEET

FITTING SIZE	TEE, WYE, PLUGED CROSS	STRADDLE BLOCK	90° BEND PLUGGED CROSS	TEE PLUGGED ON RUN A-1	TEE PLUGGED ON RUN A-2	45° BEND	22-1/2° BEND	11-1/4° BEND
4	1.0	1.6	2.0	1.9	1.4	1.0	---	---
6	2.1	3.7	4.0	4.3	3.0	1.6	1.0	---
8	3.8	6.5	6.8	7.6	5.4	2.9	1.5	1.0
10	5.9	10.2	10.3	11.8	8.4	4.6	2.4	1.2
12	8.5	14.7	14.5	17.0	12.0	6.6	3.4	1.7
14	11.5	---	19.5	23.0	16.3	8.9	4.6	2.3
16	15.0	26.1	25.3	30.0	21.3	13.7	7.0	3.5
18	19.0	---	31.7	38.0	27.0	17.2	8.8	4.4
20	23.5	40.8	38.9	47.0	33.3	21.1	10.8	5.4
24	34.0	58.8	55.5	68.0	48.0	26.2	13.6	6.8

NOTES:
1. ABOVE BEARING AREAS BASED ON TEST PRESSURE OF 150 PSI AND AN ALLOWABLE SOIL BEARING STRESS OF 2000 POUNDS PER SQUARE FOOT. TO COMPUTE BEARING AREAS FOR DIFFERENT TEST PRESSURES AND SOIL BEARING STRESSES, USE THE FOLLOWING EQUATION:

   BEARING AREA = (TEST PRESSURE / 150) x (2000 / SOIL BEARING STRESS) x (TABLE VALUE)

2. ABOVE VOLUMES BASED ON TEST PRESSURE OF 150 PSI AND THE WEIGHT OF CONCRETE = 4050 POUNDS PER CUBIC YARD. TO COMPUTE FOR DIFFERENT TEST PRESSURES, USE THE FOLLOWING EQUATION:

   VOLUME = (TEST PRESSURE / 150) x (TABLE VALUE)

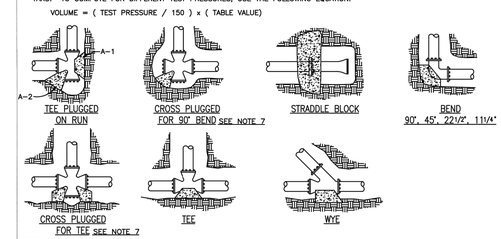

NOTES:
1. CONCRETE BLOCKING TO BE POURED AGAINST UNDISTURBED EARTH.
2. ALL CONCRETE TO BE CLASS 2400 MINIMUM.
3. INSTALL ISOLATION MATERIAL BETWEEN PIPE AND/OR FITTINGS BEFORE POURING CONCRETE BLOCKING.
4. CONCRETE SHALL BE KEPT CLEAR OF ALL JOINTS AND ACCESSORIES.
5. SEE STANDARD PLAN NO. 402 FOR VERTICAL BEND ANCHOR BLOCK DETAILS.
6. SEE STANDARD PLAN NO. 403 AND 404 FOR TIED BACK THRUST BLOCK DETAILS.
7. MAY NOT WORK OUT FOR ALL FITTING SIZES – CONFIRM USE OF THIS BLOCKING CONFIGURATION WITH ENGINEER.

Approved — City Engineer — 9-15-99 Date

CITY OF SALEM
DEPARTMENT OF PUBLIC WORKS

STANDARD PLAN
HORIZONTAL THRUST BLOCKING

No.	Description	Date	By	Appr
2.	ADJUST SIZE OF SOME THRUST BLOCKS.	3/99	JHC	
1.	CONVERT TO CAD DWG.			

REVISION

DRAWN BY: I.D.F.
CHECKED BY: R.W.L.

NO.401

LENGTH (L1) OF PIPE REQUIRED FOR RESTRAINT (FEET)

Diameter	Horizontal Bend 90°	45°	22½°	11¼°	Dead End	Reducer (Restrained Length for Large Diameter Side) 4"	6"	8"	10"	12"
4"	30	23	20	19	44	--	37	53	65	77
6"	35	25	21	20	55	--	--	38	53	67
8"	40	27	22	20	66	--	--	--	37	54
10"	44	29	23	21	76	--	--	--	--	51
12"	49	31	24	21	86	--	--	--	--	--

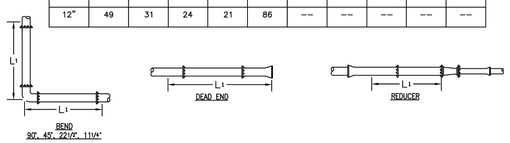

LENGTH (L1) OF PIPE REQUIRED FOR RESTRAINT WHEN USING TEES (FEET)

Tee Configurations (Restraint Length for Branch) Branch Pipe Diameter	L=0	L=2	L=4	L=6	L=8	L=10	L=12	L=14	L=16	L=18
4"	44	30	19	19	19	19	19	19	19	19
6"	55	45	36	26	19	19	19	19	19	19
8"	66	59	52	44	37	30	23	19	19	19
10"	76	70	64	58	53	47	41	35	30	24
12"	86	81	76	71	67	62	57	52	47	43

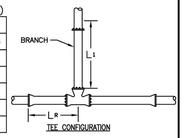

LR is the minimum length in either direction from tee to nearest adjacent joint

NOTES:
1. ALL JOINTS WITHIN THE LENGTH "L1" FROM THE ABOVE TABLE, SHALL BE RESTRAINED.
2. THE JOINT RESTRAINT LENGTHS CALCULATED ARE FOR FITTINGS USED TO CHANGE PIPE HORIZONTAL ALIGNMENT ONLY. FOR APPLICATIONS WHERE FITTINGS ARE USED TO CHANGE THE SLOPE OF THE PIPE, THE DESIGN ENGINEER SHALL INCLUDE THE JOINT RESTRAINT REQUIREMENTS ON THE PROJECT DRAWINGS.
3. IF AN UNANTICIPATED NEED FOR JOINT RESTRAINT ARISES TO CHANGE THE SLOPE OF THE PIPE, THE CONTRACTOR SHALL CONTACT THE DESIGN ENGINEER OR UTILIZE ANCHORS IN ACCORDANCE WITH STANDARD DRAWING NO. 402.
4. JOINT TYPES NOT COVERED ON ABOVE TABLE MUST BE DESIGNED INDIVIDUALLY IN ORDER TO DETERMINE APPROPRIATE RESTRAINED LENGTH. THIS LENGTH SHALL BE SHOWN ON THE PROJECT DRAWINGS.
5. THE SMALL DIAMETER SIDE OF A REDUCER DOES NOT REQUIRE RESTRAINT IF THE LARGE DIAMETER SIDE IS PROPERLY RESTRAINED.
6. ABOVE RESTRAINED LENGTHS ARE BASED ON:
   - TEST PRESSURE OF 150 POUNDS PER SQUARE INCH
   - MINIMUM OF 3 FEET COVER
   - CLASS B PIPE ZONE CONDITIONS
   - WHEN ORGANIC OR CLAY TYPE SOILS ARE BEING USED FOR BACKFILL, GRANULAR BACKFILL MUST BE USED FOR BEDDING AND BACKFILL TO A HEIGHT OF 6 INCHES OVER THE TOP OF THE PIPE BEFORE OTHER SOILS ARE PLACED.
   - UNCOATED PIPE, THIS TABLE IS NOT APPLICABLE FOR PIPE ENCASED IN POLYETHYLENE

ANY REDUCTION OF THESE VALUES AS A RESULT OF OTHER CONDITIONS ENCOUNTERED SHALL BE BASED ON THE APPROPRIATE EVALUATION AND RECOMMENDATION BY A QUALIFIED, REGISTERED ENGINEER AND WITH APPROVAL BY THE CITY.

Approved — City Engineer — 2-1-00 Date

CITY OF SALEM
DEPARTMENT OF PUBLIC WORKS

STANDARD PLAN
JOINT RESTRAINT

No.	Description	Date	By	Appr

REVISION

DRAWN BY: TAL
CHECKED BY: KW

NO. 401.5

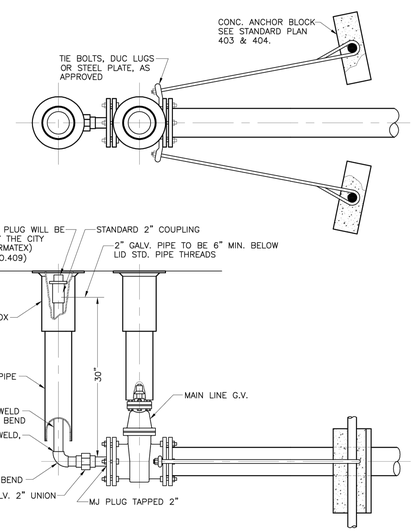

NOTES:
1. 8" MAXIMUM PIPE SIZE ALLOWED FOR 2" BLOW-OFF.

Approved — City Engineer — 9-15-99 Date

CITY OF SALEM
DEPARTMENT OF PUBLIC WORKS

STANDARD PLAN
BLOWOFF WITH IN-LINE VALVE

No.	Description	Date	By	Appr
	CONVERT TO CAD DWG.	1/98		

REVISION

DRAWN BY GS
CHECKED BY D.W.

NO.405

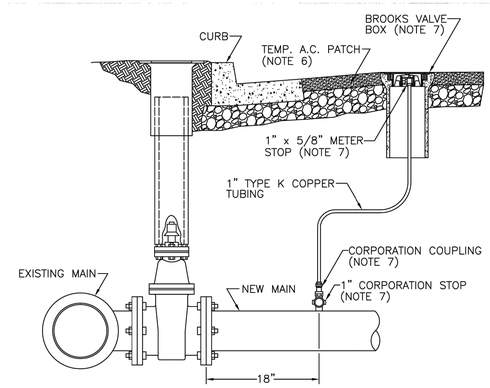

NOTES:
1. VALVE BOX OVER 1" CHLORINE LINE DOES NOT NEED TO BE INSTALLED IF CHLORINE LINE IS BEHIND THE CURB. VALVEBOX IS TO BE INSTALLED ONLY WHEN CHLORINE LINE IS IN AREA COVERED BY TRAFFIC.
2. CHLORINE LINE PLACED IN AN AREA NOT COVERED BY TRAFFIC WILL BE 6" ABOVE NATURAL GROUND LEVEL.
3. DISTANCE FROM GATE VALVE TO CHLORINE TAP WILL BE 18".
4. CHLORINATION PROCESS WILL BE CONDUCTED BY CITY FORCES ONLY, IN ACCORDANCE WITH APPROVED SPECIFICATIONS.
5. CITY WILL REMOVE CHLORINATION ASSEMBLY AFTER RECEIVING NOTICE OF NEGATIVE BACTERIOLOGICAL TEST. CONTRACTOR TO PROVIDE EXCAVATION, BACKFILL, AND FINAL SURFACE RESTORATION.
6. TEMPORARY ASPHALT SURFACE REQUIRED IN AREAS COVERED BY TRAFFIC.
7. SEE SCS DIVISION 5 FOR SPECIFICATIONS.

Approved — City Engineer — 3-1-02 Date

CITY OF SALEM
DEPARTMENT OF PUBLIC WORKS

STANDARD PLAN
MAIN LINE CHLORINATION ASSEMBLY

No.	Description	Date	By	Appr
6	TEMPORARY A.C. REQUIRED	11-14-01	I.D.F.	
5	CHANGED TO BROOKS BOX IN PAVED AREA	4-18-01	I.D.F.	
4	REVISED NOTES AND ADDED LABELS	2-23-01	I.D.F.	
3	REMOVED "MIN." FROM 18-INCH DIMENSION	2-23-01	I.D.F.	
	CHLORINE LINE CHANGED TO 1-INCH FROM 3/4"			
	DIST. FROM TAP TO VALVE CHANGED TO 18-INCHES			

REVISION

DRAWN BY I.D.F.
CHECKED BY D.W.

NO. 412

9-15-99

NOTES
1. TIE RODS TO BE 5/8" A307 STEEL BOLT STOCK WITH 14,000 PSI TENSILE STRENGTH OR APPROVED EQUAL. ONE TIE ROD PER SIDE.
2. IF HYDRANT IS NOT INSTALLED ON STUB.
   a. DELETE PIER BLOCK AND GRAVEL FOR DRAINAGE.
   b. BOLT BLIND FLANGE OVER OPEN FLANGE OF GATE VALVE.
3. DO NOT PLACE THRUST BLOCKS BEHIND TEE OR HYDRANT.
4. PUMPER OUTLET TO FACE THE DIRECTION OF ACCESS.
5. THERE SHALL BE A MINIMUM OF 18" HORIZONTAL DISTANCE AROUND HYDRANT.
6. WHEN PLACED ADJACENT TO CURB, HYDRANT PORT SHALL BE 24" FROM FACE OF CURB.
7. FIRE HYDRANTS SHALL BE PLACED TO PROVIDE A MINIMUM OF 5' CLEARANCE FROM DRIVEWAYS, POLES, AND OTHER OBSTRUCTIONS.
8. VERTICAL EXTENSIONS REQUIRED FOR HYDRANT SYSTEMS SHALL BE INSTALLED TO THE MANUFACTURER'S SPECIFICATIONS.
9. FOR LINE LENGHTS EXCEEDING 18' USE FULLY RESTRAINED PIPE SYSTEM, "MEGA-LUG" OR APPROVED EQUAL.

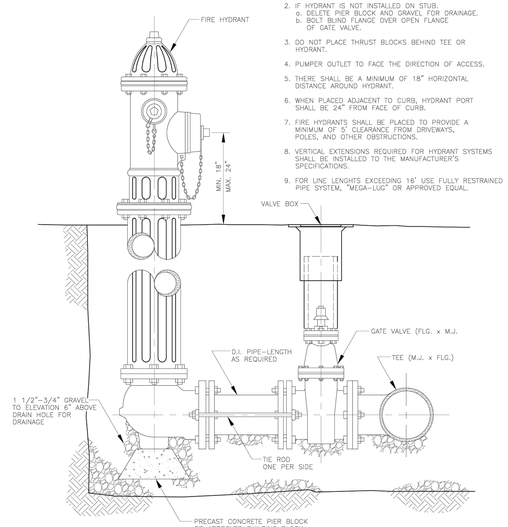

Approved — City Engineer — 1-7-00 Date

CITY OF SALEM
DEPARTMENT OF PUBLIC WORKS

STANDARD PLAN
FIRE HYDRANT INSTALLATION

No.	Description	Date	By	Appr
2	REVISE VALVE BOX	1-00	D.F.	KOG
1	CONVERT TO CAD DWG.	12-98	D.F.	KOG

REVISION

DRAWN BY IDF
CHECKED BY D.W.

NO.413

NO.	DATE	DESCRIPTION	BY
—		REVISIONS	

VERIFY SCALE
BAR IS ONE INCH ON ORIGINAL DRAWING
0 1"
IF NOT ONE INCH ON THIS SHEET, ADJUST SCALES ACCORDINGLY

DSN. JW
DRN. AK
CKD. JW
DATE: 06/2022

REGISTERED PROFESSIONAL ENGINEER — REVIEW — WILLIAM L. WELLS — 6/30/2024
RENEWAL 6/30/2024

WESTECH ENGINEERING, INC.
CONSULTING ENGINEERS AND PLANNERS
3841 Fairview Industrial Dr. S.E., Suite 100, Salem, OR 97302
Phone: (503) 585-2474 Fax: (503) 585-3986
E-mail: westech@westech-eng.com

CLUTCH INDUSTRIES
BLOSSOM APARTMENTS

CITY OF SALEM DETAILS

DRAWING
C7.4

JOB NUMBER
3366.0000.0

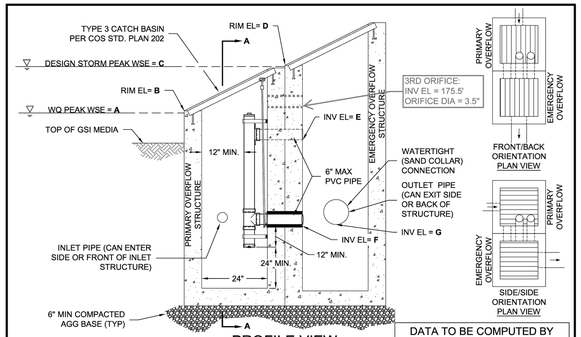

PROFILE VIEW
(Front/Back Orientation Shown)

DATA TO BE COMPUTED BY DESIGN ENGINEER
A= 171.91'
B= 174.60'
C= 175.99'
D= 176.00'
E= 174.80'
F= 171.43'
G= 171.43'
H= 2.0"
I= 1.5"
J= 168.25'
K= 171.43'
L= 168.43'

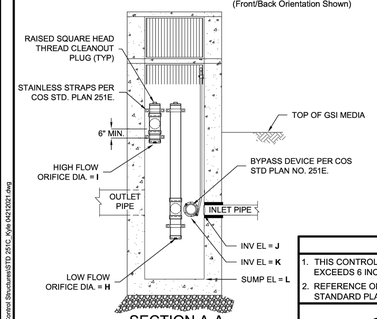

SECTION A-A
NTS

GENERAL NOTES

1. THIS CONTROL STRUCTURE NOT FOR USE WHEN ORIFICE SIZE EXCEEDS 6 INCHES.
2. REFERENCE ORIFICE MEASUREMENT TABLE ON COS STANDARD PLAN 251E FOR ORIFICE SIZE REQUIREMENTS.

CITY OF SALEM
DEPARTMENT OF PUBLIC WORKS

STANDARD PLAN
FLOW CONTROL STRUCTURE-TYPE 3

CHANGES			
APPROVED	CITY ENGINEER	6/8/2021	DATE

DRAWN BY	KLA	4/2021	**NO.251C**
CHECKED BY	JDL	4/2021	

G:\Group\tech\pdd\Std_plans\Working dwgs\Control Structures\STD 251C_Kyle 04272021.dwg

NOTE:

1. Concrete shall attain a strength of 3300 p.s.i. in 20 days.
2. Top shall be reinforced with 4"x4"–6–6 wire mesh.
3. All metal parts shall be hot dipped galvanized after fabrication.
4. Cover shall be ASTM A–48 Class 30 cast iron.
5. Drain shall be P.V.C. (Schedule 40) with cap. Drain Pipe shall have 6–3/8" diameter holes in lower side. Cap shall have 4–3/8" diameter drill holes. Two drains required when c.b. located at sag vertical curve.

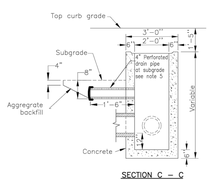

SECTION C – C

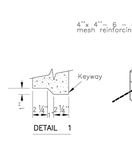

DETAIL 1

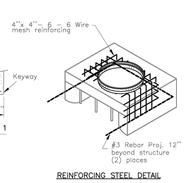

REINFORCING STEEL DETAIL

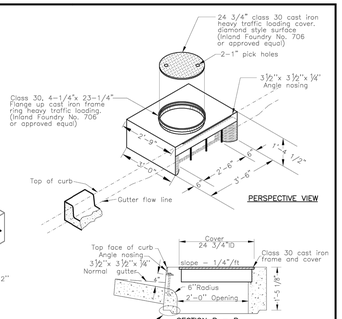

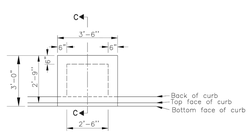

PLAN BASE SECTION

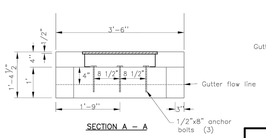

SECTION A – A

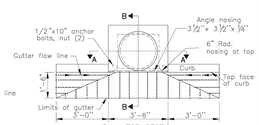

PLAN TOP SECTION

NO SCALE

Approved Karl O. Houston 9–15–99
City Engineer Date

No.	Description	Date	By	Appr
	CONVERT TO CAD DWG.			

REVISION

CITY OF SALEM
DEPARTMENT OF PUBLIC WORKS

STANDARD PLAN
TYPE 4 CATCHBASIN

DRAWN BY GS		**NO.203**
CHECKED BY D.W.		

11/28/2022 6:52:25 AM
C:\Users\CAD\Desktop\Work (PC)\Projects\Clutch Industries\Blossom\Civil\Plats\C7.0 – Details.dwg, (C7.5 tab)

NO.	DATE	DESCRIPTION	BY
		REVISIONS	

VERIFY SCALE
BAR IS ONE INCH ON ORIGINAL DRAWING
0 1"
IF NOT ONE INCH ON THIS SHEET, ADJUST SCALES ACCORDINGLY

DSN. JW
DRN. AK
CKD. JW
DATE: 06/2022

REGISTERED PROFESSIONAL ENGINEER
WILLIAM J. WELLS
REVIEW
RENEWS: 6/30/2024

WESTECH ENGINEERING, INC.
CONSULTING ENGINEERS AND PLANNERS
3841 Fairview Industrial Dr. S.E., Suite 100, Salem, OR 97302
Phone: (503) 585-2474 Fax: (503) 585-3986
E-mail: westech@westech-eng.com

CLUTCH INDUSTRIES
BLOSSOM APARTMENTS

CITY OF SALEM DETAILS

DRAWING
C7.5

JOB NUMBER
3366.0000.0

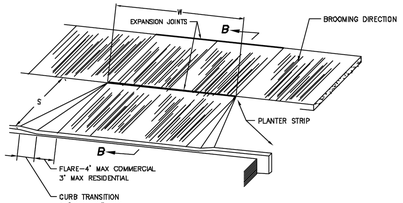

DRIVEWAY APPROACH WITH PROPERTY-LINE WALK

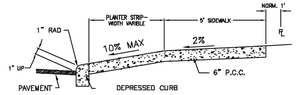

SECTION B-B
NO SCALE

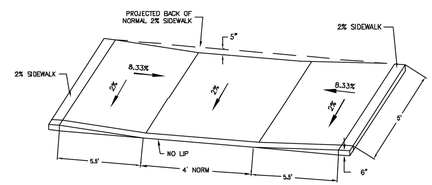

CURBLINE SIDEWALK WHEELCHAIR RAMP DETAIL

(FOR CORNERS AND STRAIGHT WALKS)
RAMP OPTION #1 OF 3 - 2% CROSS SLOPE

Marion County Dept. of Public Works Engineering 503. 588-5036 Salem, Oregon 118

STANDARD CURBED SECTION DRIVEWAY

Date: 10	Eng:	Date: 11-22-93	Revised: 10-99	
Reviewed By—Survey:		Datum: NONE		SCALES
Appd.	Project:	Drwn. HOT/JJR	Horz: NONE	Vert: NONE

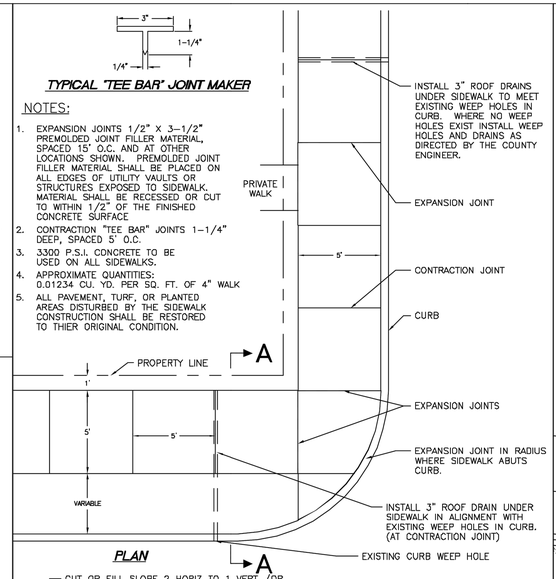

TYPICAL "TEE BAR" JOINT MAKER

NOTES:

1. EXPANSION JOINTS 1/2" X 3–1/2" PREMOLDED JOINT FILLER MATERIAL, SPACED 15' O.C. AND AT OTHER LOCATIONS SHOWN. PREMOLDED JOINT FILLER MATERIAL SHALL BE PLACED ON ALL EDGES OF UTILITY VAULTS OR STRUCTURES EXPOSED TO SIDEWALK. MATERIAL SHALL BE RECESSED OR CUT TO WITHIN 1/2" OF THE FINISHED CONCRETE SURFACE
2. CONTRACTION "TEE BAR" JOINTS 1–1/4" DEEP, SPACED 5' O.C.
3. 3300 P.S.I. CONCRETE TO BE USED ON ALL SIDEWALKS.
4. APPROXIMATE QUANTITIES: 0.01234 CU. YD. PER SQ. FT. OF 4" WALK
5. ALL PAVEMENT, TURF, OR PLANTED AREAS DISTURBED BY THE SIDEWALK CONSTRUCTION SHALL BE RESTORED TO THIER ORIGINAL CONDITION.

PLAN

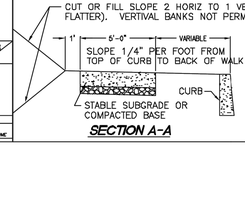

SECTION A-A

Marion County Dept. of Public Works Engineering 503. 588-5036 Salem, Oregon 15

STANDARD SIDEWALK DETAILS

Date:	Eng:	Date: 11-22-93	Revised:	
Reviewed By—Survey:		Datum: NONE		SCALES
Appd.	Project:	Drwn. HOT	Horz: NONE	Vert: NONE

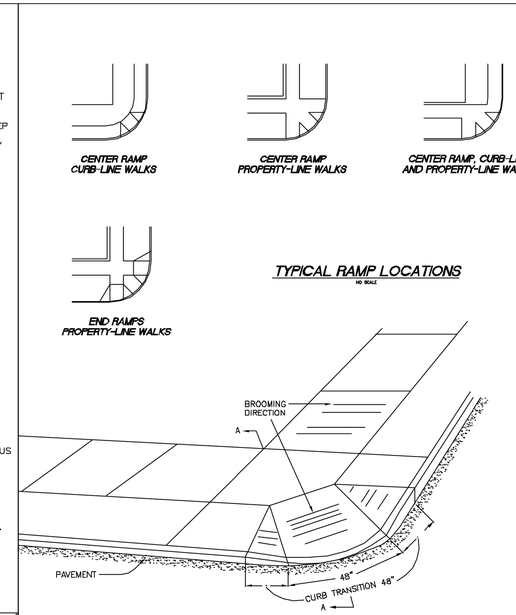

TYPICAL RAMP LOCATIONS

NO SCALE

Marion County Dept. of Public Works Engineering 503. 588-5036 Salem, Oregon 16

TYPICAL BICYCLE AND WHEELCHAIR RAMPS

Date:	Eng:	Date: 11-22-93	Revised:	
Reviewed By—Survey:		Datum:		SCALES
Appd.	Project:	Drwn. HOT	Horz: NONE	Vert: NONE

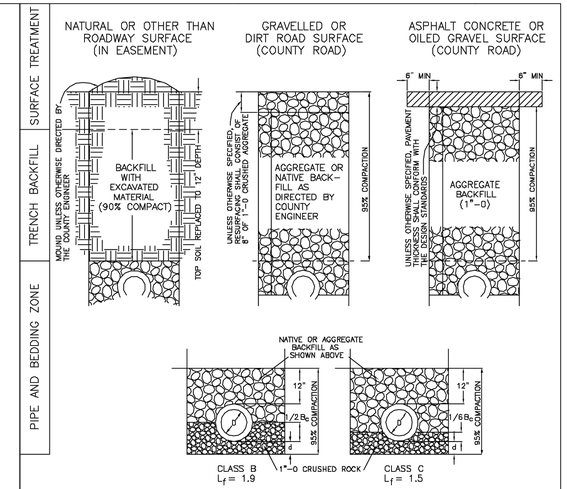

DEPTH OF BEDDING MATERIAL BELOW PIPE	
D	d(MIN.)①
27" AND SMALLER	4"
30"– 60"	5"
66" AND LARGER	6"

LEGEND

B_c = OUTSIDE DIAMETER
D = INSIDE DIAMETER
d = DEPTH OF BEDDING MATERIAL BELOW PIPE
L_f = LOAD FACTOR

NOTES

1. FOR ROCK OR OTHER INCOMPRESSIBLE MATERIALS, THE TRENCH SHALL BE OVEREXCAVATED A MINIMUM OF 6" AND REFILLED WITH AGGREGATE MATERIAL AS DIRECTED BY THE ENGINEER.
2. BEDDING AND BACKFILL MATERIALS IN THE PIPE ZONE SHALL BE COMPACTED AS SPECIFIED PRIOR TO BACKFILLING THE REMAINDER OF THE TRENCH.

Marion County Dept. of Public Works Engineering 503. 588-5036 Salem, Oregon 25

PIPE BEDDING AND TRENCH BACKFALL

Date:	Eng:	Date: 7-2-99	Revised:	
Reviewed By—Survey:		Datum: NONE		SCALES
Appd.	Project:	Drwn. CDM	Horz: NONE	Vert: NONE

NO.	DATE	DESCRIPTION	BY
—		REVISIONS	

VERIFY SCALE
BAR IS ONE INCH ON ORIGINAL DRAWING
0 1"
IF NOT ONE INCH ON THIS SHEET, ADJUST SCALES ACCORDINGLY

DSN. JW
DRN. AK
CKD. JW
DATE: 06/2022

REGISTERED PROFESSIONAL ENGINEER
WILLIAM J. WELLS
REVIEW
RENEWS: 6/30/2024

WESTECH ENGINEERING, INC.
CONSULTING ENGINEERS AND PLANNERS
3841 Fairview Industrial Dr. S.E., Suite 100, Salem, OR 97302
Phone: (503) 585–2474 Fax: (503) 585–3986
E-mail: westech@westech-eng.com

CLUTCH INDUSTRIES
BLOSSOM APARTMENTS

MARION COUNTY DETAILS

DRAWING
C7.6

JOB NUMBER
3366.0000.0