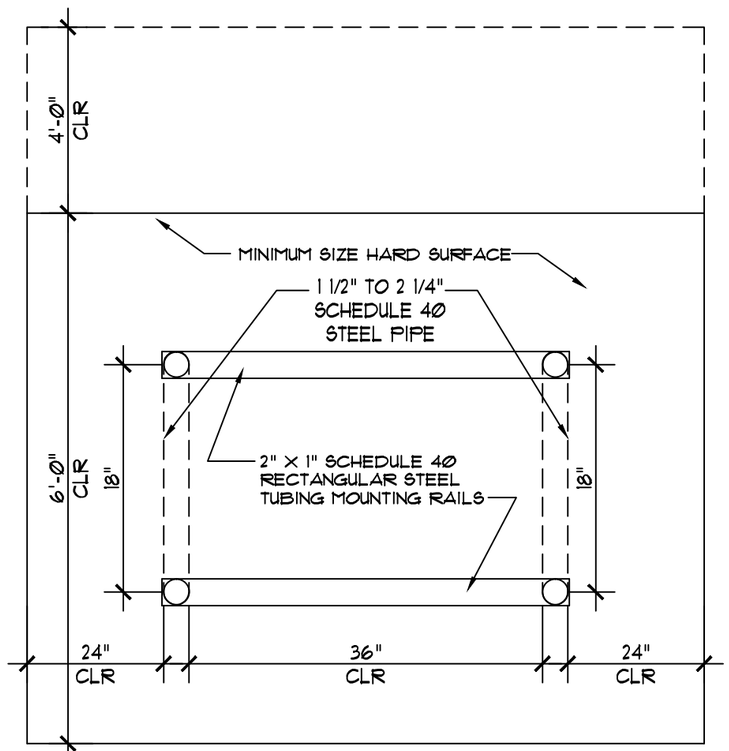

PLAN VIEW - MULTIPLE "U"

NOTES

1) BIKE RACKS SHALL HAVE A GLOSS BLACK POLYESTER POWDER COAT FINISH.

2) MOUNTING RAILS SHALL BE FURNISHED WITH MOUNTING HOLES AND VANDAL RESISTENT CONCRETE ANCHOR MOUNTING HARDWARE.

3) EACH "U" SHALL BE WELDED OR MOUNTED TO RAILS OR PLATES WITH VANDAL RESISTANT OR HIDDEN FASTENERS.

4) FOR SINGLE "U" INSTALLATION, EACH MOUNTING PLATE WILL BE EQUIPPED WITH TWO ANCHOR BOLT HOLES EACH.

1 BICYCLE PARKING RACK DETAIL

SCALE: 1"=1'-0"

M:/02SITEWK/600PIPNG/02600 BIKE RACK

ALL DETAILS ARE TO COMPLY WITH THE ACCESSIBLE STANDARDS PUBLISHED BY OREGON DEPT OF TRANSPORTATION (2018)
<https://www.oregon.gov/ODOT/Engineering/DOCS_ADA/ADA_Standards-Accessible-Parking.pdf>

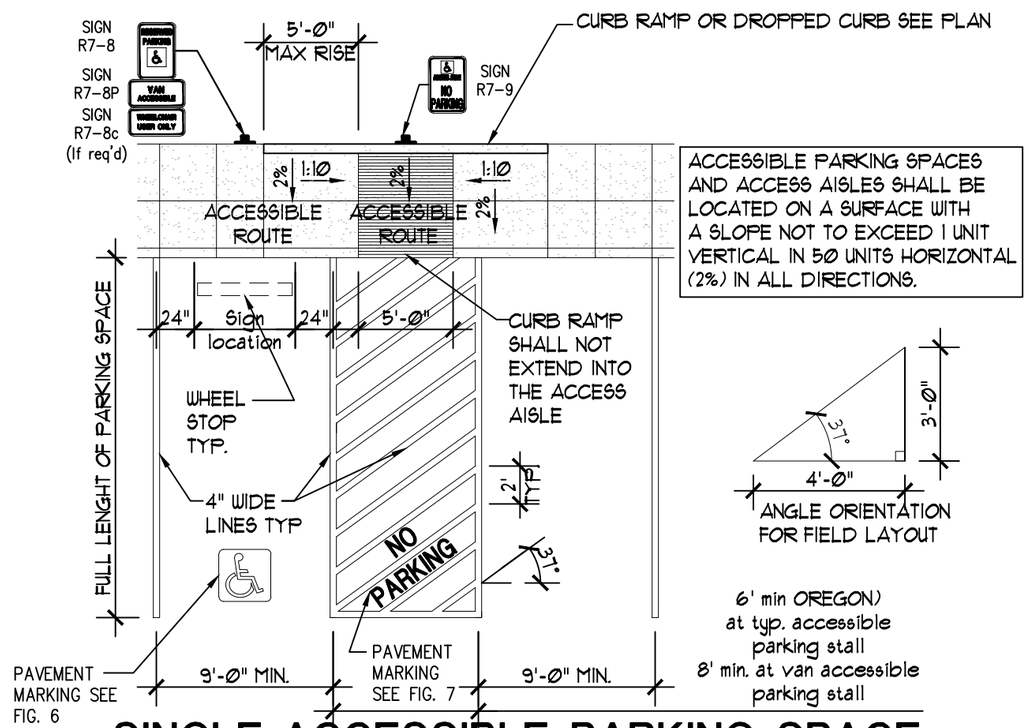

ACCESSIBLE PARKING SPACES AND ACCESS AISLES SHALL BE LOCATED ON A SURFACE WITH A SLOPE NOT TO EXCEED 1 UNIT VERTICAL IN 50 UNITS HORIZONTAL (2%) IN ALL DIRECTIONS.

2 SINGLE-ACCESSIBLE PARKING SPACE

VAN-ACCESSIBLE DESIGNATION REQUIRED

SCALE: 1/8" = 1'-0"

M:/02SITEWK/580PVMRK/02580 HC-SGL

RONALD JAMES PED ARCHITECT P.C.

REGISTERED ARCHITECT
RONALD JAMES PED
SALEM, OREGON
STATE OF OREGON

NEW APARTMENTS FOR:
SERVANDO GARCIA
17th and OAK, SALEM OR 97301

DATE: 9-9-2021
DRAWN: AK
JOB NO.: 2159

SPR-6

P:\2159 Servando Garcia 17th and Oak apts\SPR-3\SPR-3 rev.dwg, SPR-6-DETAILS-DR, 9/16/2022 11:50:52 AM, Andy, 1:1