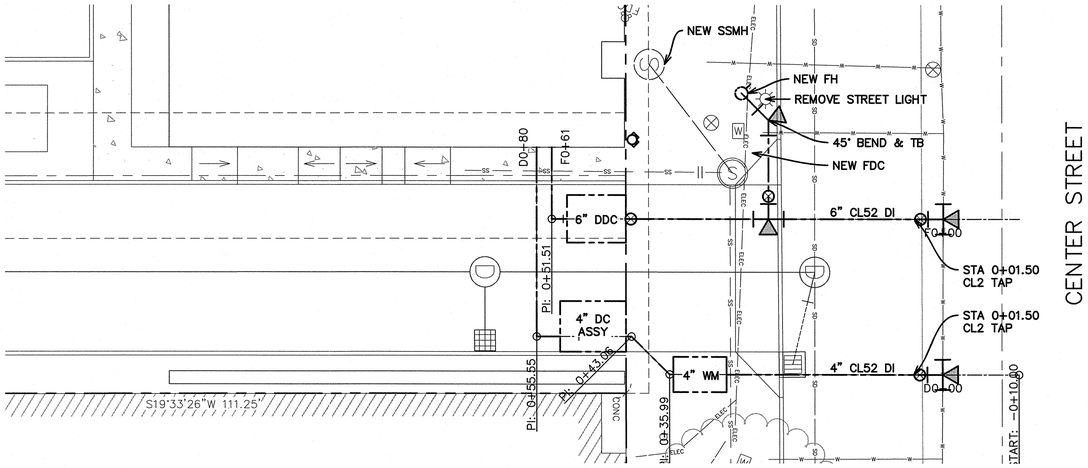

WATERLINE PLAN

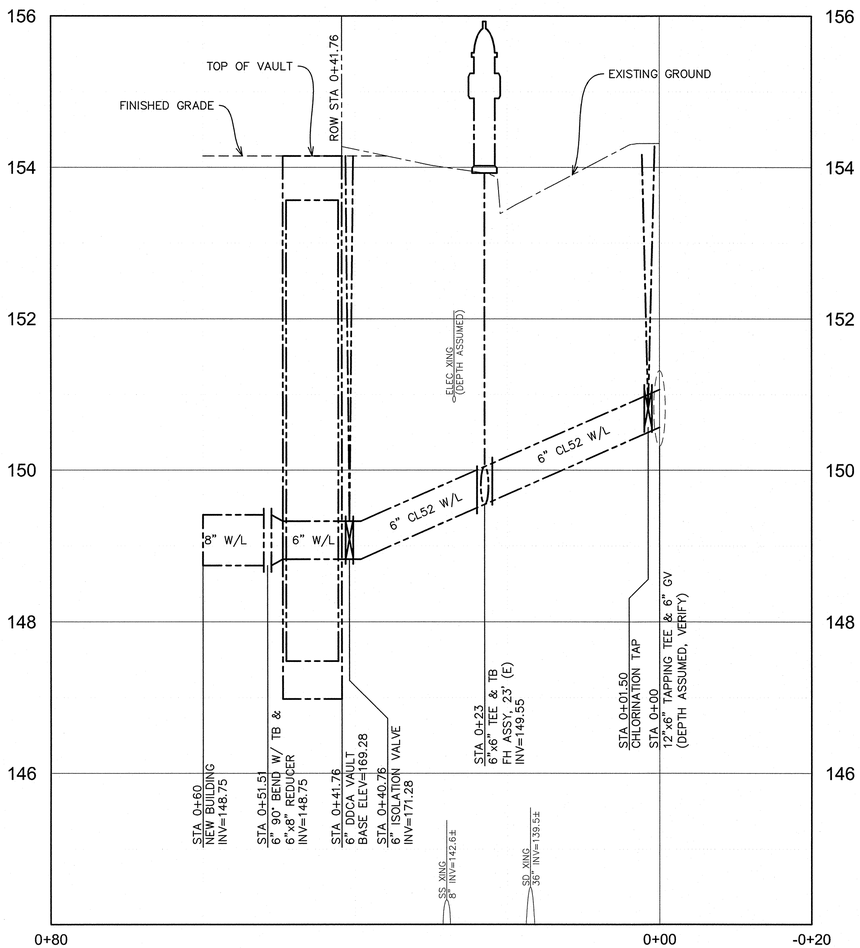

FIRE LINE PROFILE

1" = 10' H, 1" = 1' V

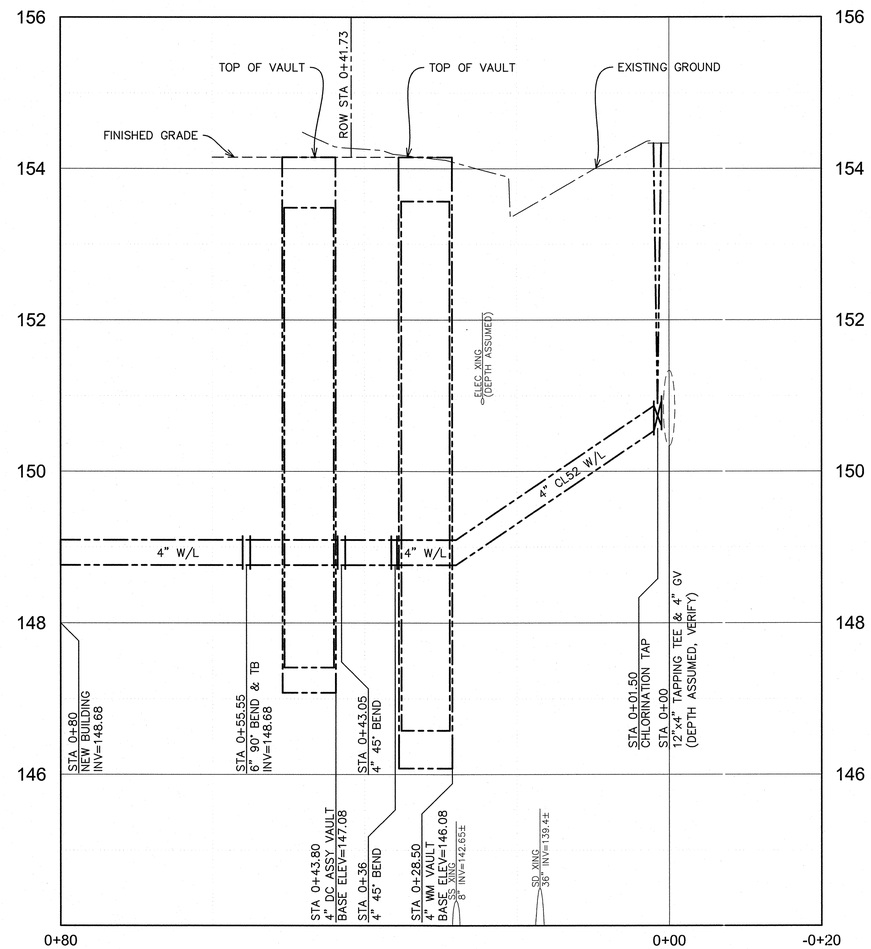

DOMESTIC WATER PROFILE

1" = 10' H, 1" = 1' V

NO.	DATE	DESCRIPTION	BY
4	01/20/22	ADDED FUTURE CB	AR
3	12/13/21	CITY COMTS/COORD W/ STREETSCAPE	AR
2	11/05/21	PER CITY COMMENTS	AR

REVISIONS

VERIFY SCALE
BAR IS ONE INCH ON ORIGINAL DRAWING
0 1"
IF NOT ONE INCH ON THIS SHEET ADJUST SCALES ACCORDINGLY

DSN. SAW
DRN. AR
CKD. SAW
DATE: JUL 2021

REGISTERED PROFESSIONAL ENGINEER
11843
OREGON
JULY 15, 1986
STEVEN A. WAND
RENEWS: 6/30/2022

WESTECH ENGINEERING, INC.
CONSULTING ENGINEERS AND PLANNERS
3841 Fairview Industrial Dr. S.E., Suite 100, Salem, OR 97302
Phone: (503) 585-2474 Fax: (503) 585-3986
E-mail: westech@westech-eng.com

DEACON DEVELOPMENT, LLC

CENTRAL CITY APARTMENTS

PUBLIC WATERLINE PLAN–PROFILE

DRAWING
C4.0

JOB NUMBER
3302.0000.0

1/19/2022 6:07:27 PM
R:\Dwg\Deacon Development, LLC\Central City Apartments\Civil\Plots\C4.0 Public Water P-P.dwg, (Layout1 tab)