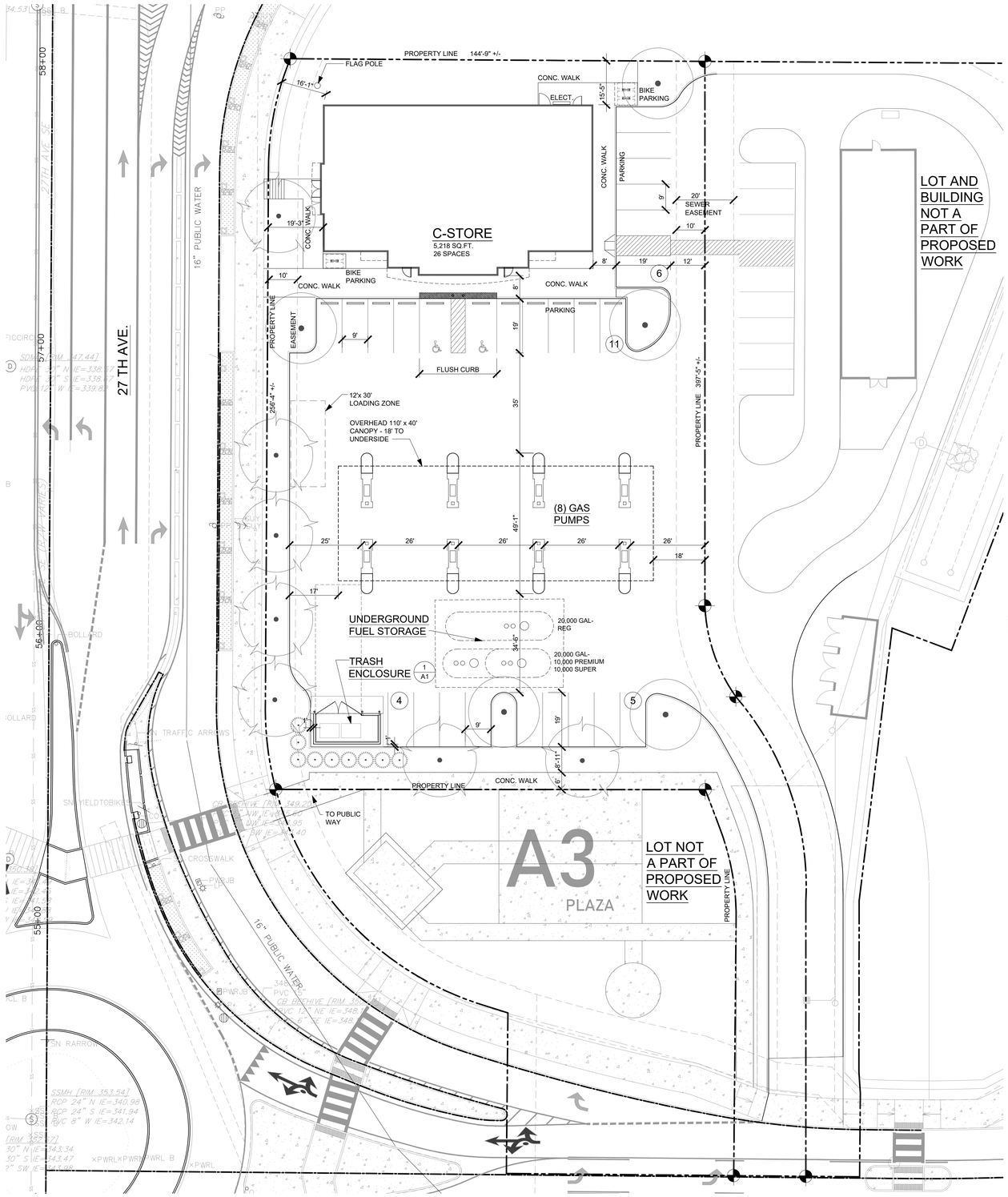

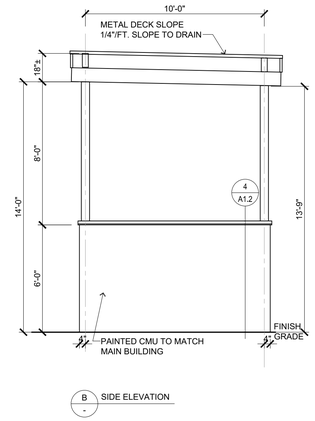

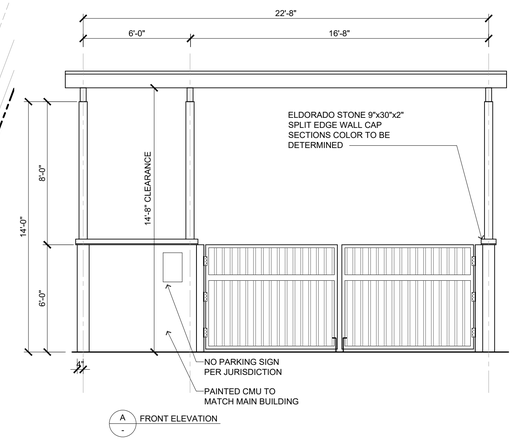

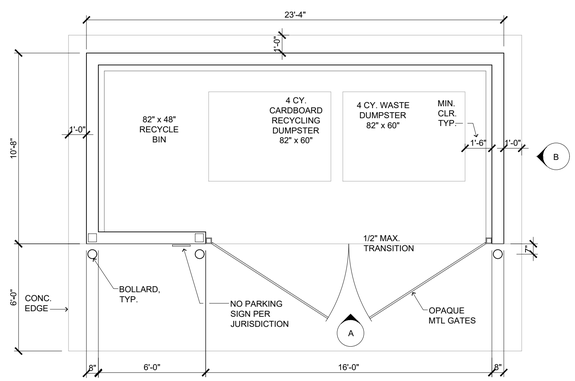

1 TRASH AND RECYCLING ENCLOSURE
(PLAN) (UNDER SEPARATE PERMIT)
SCALE: 1/4" = 1'-0"

Site and Project Information	
Site Location:	2900 Kuebler Blvd., Salem OR 97317
Parcel Number:	083W12C002201
Taxlot Number:	2201
Parcel Size:	±0.99 AC
Zoning:	MU-III – Mixed Use-III
Overlay:	NA
Abutting Zone(s):	MU-II – Mixed Use-II
Existing Use:	Vacant Lot
Proposed Use:	Convenience store, 8 pump Gas Station

MU-III – Mixed Use III			
Code Section:		*Required*	*Proposed*
Table 535-2	Minimum Lot Size:	None	43,056 SF (0.99 AC)
Table 535-3	Setbacks	5' min 30' max Up to the first 10 ft of the setback area can be used exclusively for pedestrian amenities At least 50 percent of the remaining setback area must be landscaped.	North Setback – 15'-5" South Setback – 6'-0" West Setback – 10'-0" East Setback -
Table 535-5	Lot Coverage: Max. Height:	No Max. 70'	1 Story – 35' max.
Table 535-5 (e) (3)	Min Landscaping	Min 15% of development site (6458 SF)	7169 SF Landscape Provided
Table 535-5 (e) (4)	Gas Station Min Landscaping	1 Plant Unit (PU) per 16 SF of Landscaped Area	408 Plant Units Provided for 6458 SF required Landscape Area
Table 807-1 806.035	Landscape Types Type A	Min. 1 PU per 16 sq. ft. of landscaped area Required Screening - None	408 Plant Units Provided for 7169 SF Landscaped Area
Table 806-1	Maximum Off-street Parking: Retail Sales: 1 per 200 SF	• 5,178 SF C-Store for Gas Station: 5,178/200 = 25.89 26 Total	26 Standard
Table 806-2	Parking Space Dimensions	Compact: 8' x 15' Standard: 9' x 19'	26 Standard
Table 806-4	Off-Street Parking Area Landscaping	12,087 SF – Min 5% (604 SF)	1469 SF Provided
Table 806-9	Bicycle Parking	Retail Sales: 4 spaces Max % of Long-term spaces allowed: 25%	5 stalls provided 0 Long Term
Table 806-10	Minimum Bicycle Parking Space Size	Standard: 2' x 6' Side-by-side: 1.5' x 6'	5 stalls provided
806.015(c)	Compact: 8' x 16'	75% allowed	No compact provided
8.0510.8	Loading Zone:	Min: 1 (12'x30') loading zone req'd (Total Retail Sales and Service buildings: 5,000 SF-60,000 SF)	1 Provided

SITE PLAN
DATE: 02/06/2025
1" = 20'
0 10 20 40 60

lenity architecture, inc.
3150 Kettle Court SE, Salem, Oregon 97301
▶503 399 1090 ▶503 399 0565 ▼lenityarchitecture.com

US MARKET

US MARKET
2900 KUEBLER BLVD.
SALEM, OR 97306

ARCHITECTURAL SITE PLAN

DATE
11/22/2024

REVISED DATE

SHEET
A1

©2025 Lenity Architecture, Inc.

save:2/11/2025 12:29 PM davidh pid:2/11/2025 1:03 PM davidh hulbert file:u:\2024\24-06_or_salem_2900 kuebler blvd\project\civil\3-sect\a1 site plan.dwg A1