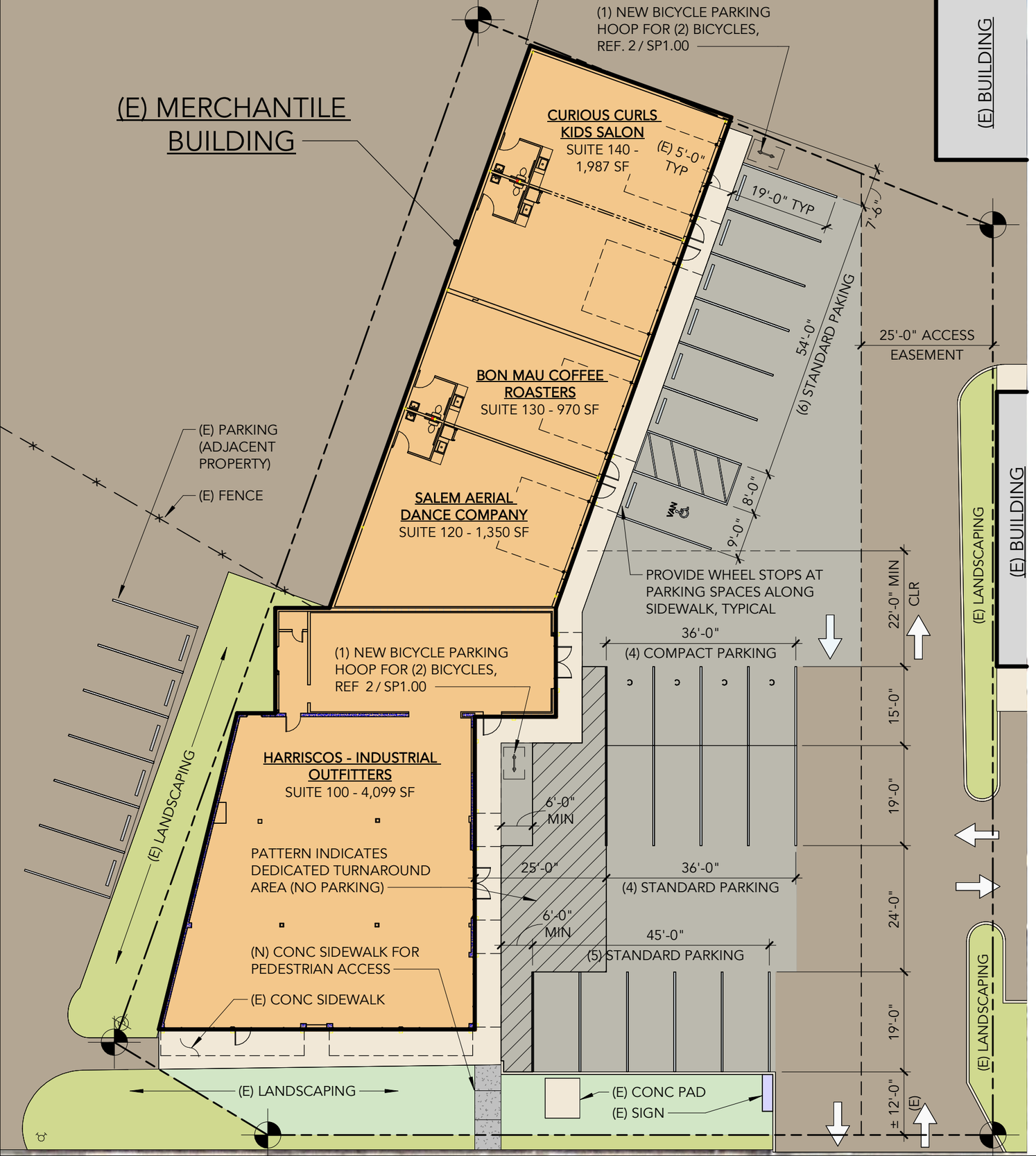

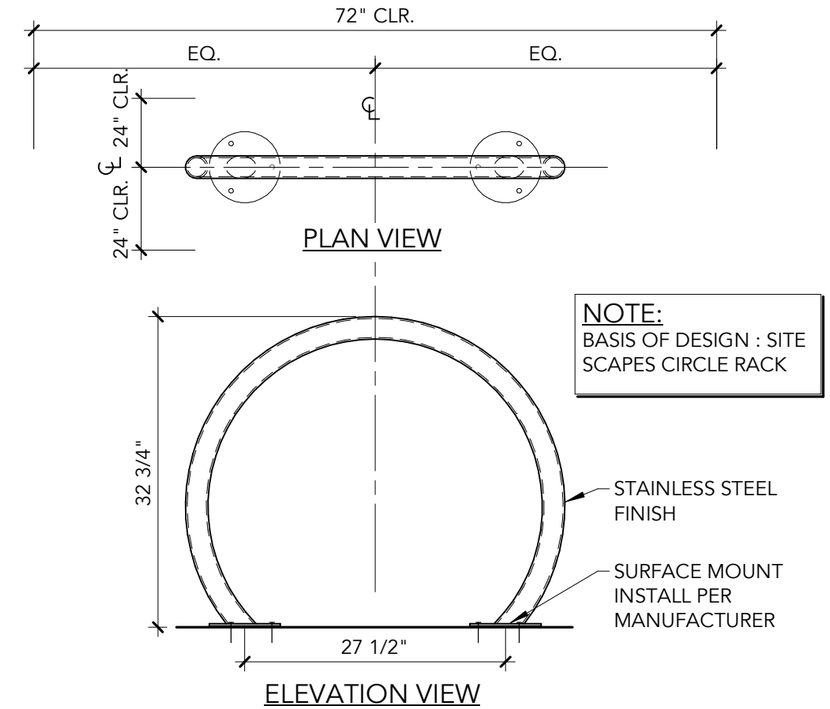

2 BICYCLE RACK DETAIL

SCALE: 3/4" = 1'-0"

PARKING STATISTICS

DESCRIPTION	# PROVIDED
FULL-SIZE PARKING STALLS	15
COMPACT PARKING STALLS	4
ACCESSIBLE PARKING STALLS	1
TOTAL ON-SITE PARKING	20

DESCRIPTION	# PROVIDED
BICYCLE PARKING	4

OTHER SITE STATISTICS

DESCRIPTION	AREA (SF)
PARKING AREA	7,709
STREET-FRONTAGE LANDSCAPE AREA	1,175

1 SITE PLAN

SCALE: 1" = 20'-0"

SITE PLAN

SP1.00

DATE: 12/09/24 REVISION: 03

1793-1797 SILVERTON RD

CBTWO ARCHITECTS LLC