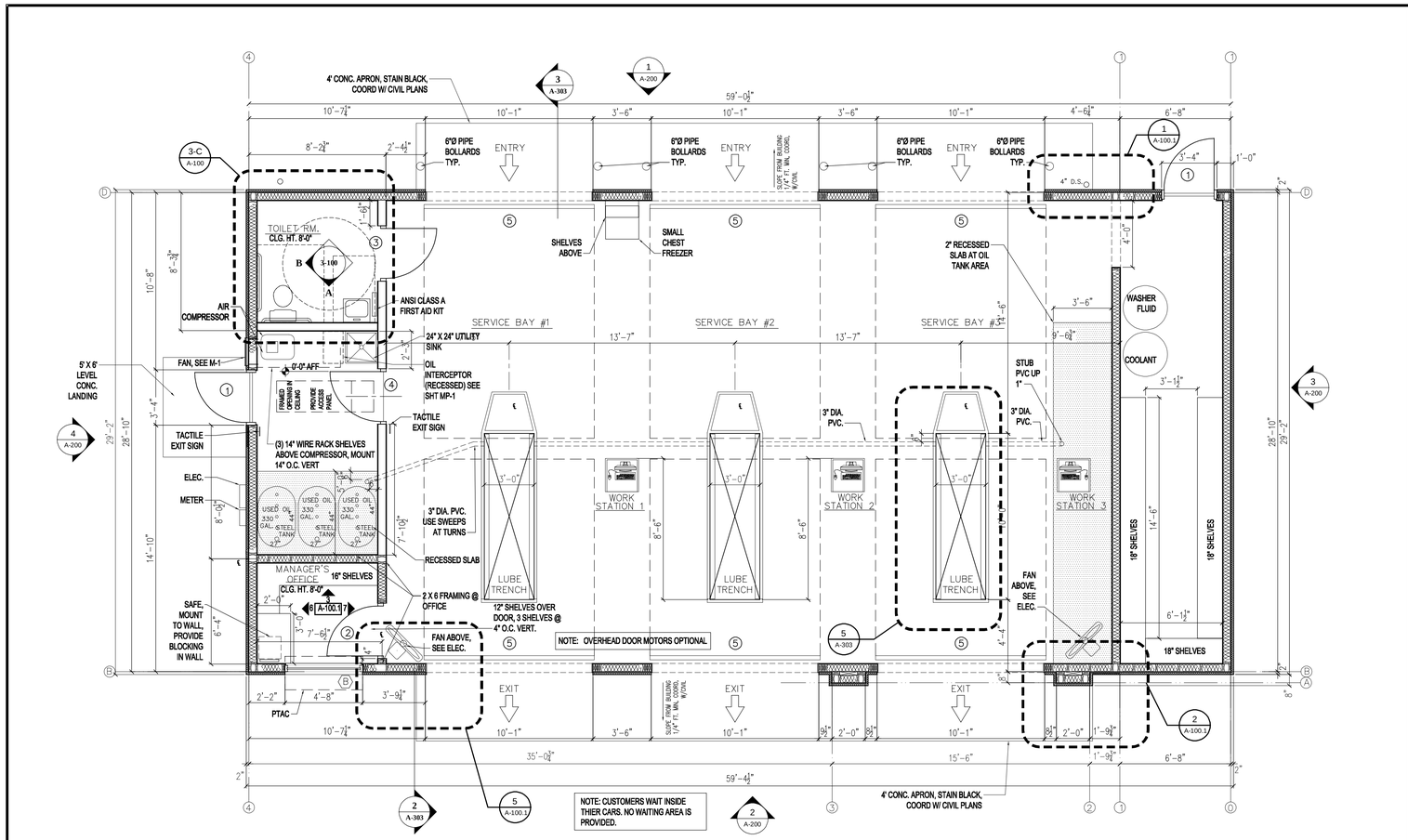

1 A-100 PLAN
1/4"=1'-0"

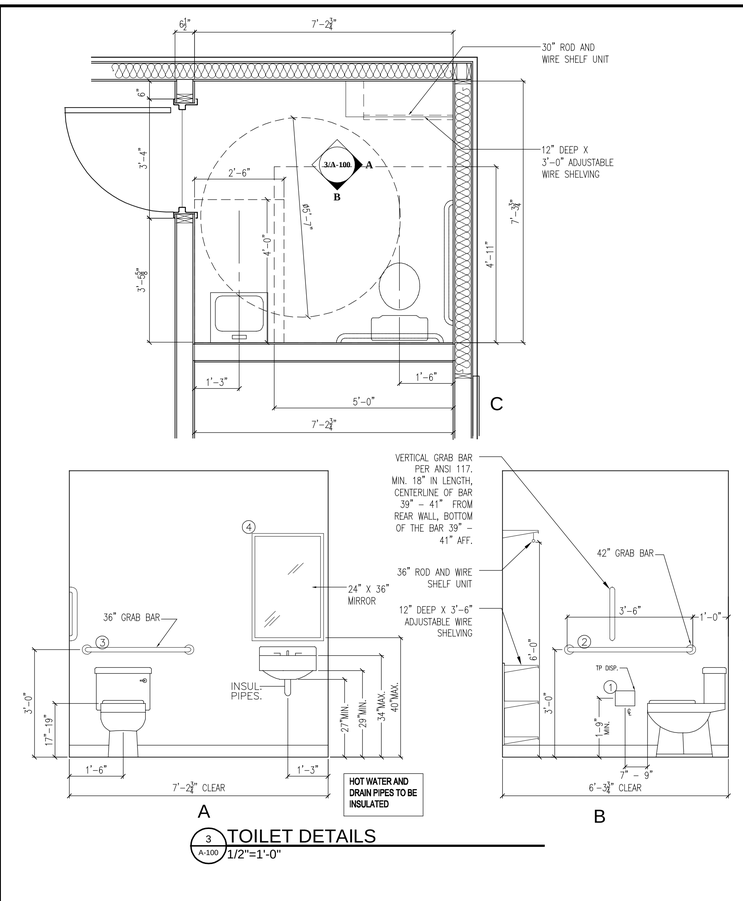

3 A-100 TOILET DETAILS
1/2"=1'-0"

FINISH SCHEDULE

AREA	FLOOR	BASE	WALLS	CEILING	CLG. HT.	REMARKS
SERVICE BAYS	CONC., SEALED ✳	VINYL	1/2" PLYWD.	NONE	OPEN (13'-4" TRUSS HT)	✳ SMOOTH FINISH. STAINED B-C PLYWD. NOTE 1,2,3,4,8,9,10
MANAGER'S OFFICE	CONC., SEALED ✳	VINYL	1/2" PLYWD.	1/2" PLYWD.	8'-0"	✳ SMOOTH FINISH. STAINED B-C PLYWD. NOTE 1,2,3,4,8,9,10
TOILET RM.	CONC., SEALED ✳	VINYL	1/2" PLYWD.	1/2" PLYWD.	8'-0"	✳ SMOOTH FINISH. STAINED B-C PLYWD. NOTE 1,2,3,4,8,9,10,11
WASTE OIL	CONC., SEALED ✳	CONC. 2" DEPRESSED SLAB @ OIL TANK AREAS	1/2" PLYWD.	NONE	OPEN (13'-4" TRUSS HT)	✳ SMOOTH FINISH. STAINED B-C PLYWD. NOTE 1,2,3,4,8,9,10

NOTE 1: PAINT EXPOSED WALL SURFACE (GWB OR PWD)
NOTE 2: PAINT EXPOSED CEILING
NOTE 3: ALL INTERIOR FINISHES ARE TO MEET TABLE 803.5 OF THE NCBC.

NOTE 4: INTERIOR PAINT COLOR TO BE EGGSHELL WHITE (SW 7006 "EXTRA WHITE") EXCEPT WHERE NOTED.

NOTE 7: SEE STRUCTURAL DWGS FOR DEPRESSED SLAB DETAILS

NOTE 8: STAIN – H&C INFUSION REACTIVE CONC. STAIN (SIENNA RED 40.002084. ADD A LIGHT BROADCAST OF "SHARK GRIP" PRODUCT TO FINAL COAT OF STAINED AND SEALED FLOORING SYSTEM.
NOTE 9: SEALER – H&C PRO SERIES SOLVENT BASED DECORATIVE CONC. SEALER (CLEAR)

NOTE 10: ALL INTERIOR TRIM TO BE "INDUSTRIAL GRAY" (SW 7017 "DORIAN GRAY")

NOTE 11: ALL INTERIOR WALL PAINT TO BE WASHABLE SEMI-GLOSS ENAMEL PAINT

DOOR SCHEDULE

MARK	SIZE	DOOR TYPE	DOOR FINISH	FRAME	FRAME FINISH	HARDWARE	ELEV.	REMARKS
1	3' x 7'-4"	FLUSH H.M.	PAINT DK BRONZE EXT GRAY INT	H.M.	PAINT DK BRONZE EXT GRAY INT	SET 1	1	CLOSER, LOCKSET, THRESHOLD. NOTE 1,2,5
2	3' x 7'	FLUSH H.M.	PAINT GRAY EXT GRAY INT	H.M.	PAINT GRAY EXT GRAY INT	SET 2	2	LOCKSET, HALF GLASS (TINTED), CLOSER NOTE 1,2,4
3	3' x 7'	FLUSH H.M.	PAINT GRAY EXT GRAY INT	H.M.	PAINT GRAY EXT GRAY INT	SET 3	3	LOCKSET, CLOSER. NOTE 1,2, 6
4	3' x 7'	FLUSH H.M.	PAINT GRAY EXT GRAY INT	H.M.	PAINT GRAY EXT GRAY INT	SET 4	4	LOCKSET, CLOSER NOTE 1,2
5	10' x 11'-6"	UPWARD ACTING	FACTORY FINISH CLOPAY "CHOCOLATE"	H.M.	FACTORY FINISH CLOPAY "CHOCOLATE"	–	5	3 CENTER SECTIONS GLASS NOTE 3,4

OVERHEAD DOOR VENDOR - CLOPAY, SEE SHEET A-103, NO SUBSTITUTIONS

WINDOW SCHEDULE

B	4'-8" x 4'-0"	FIXED GLASS	DOUBLE PANE, LOW-E GLASS, TINTED	–	ALUM.	ANODIZED / DARK BRONZE EXT – PAINT GRAY INT	——	NOTE 4

DOOR AND WINDOW NOTES
NOTE 1: HARDWARE TO BE LEVER ACTION AND MEET ALL ADA REQUIREMENTS
NOTE 2: HARDWARE TO BE COMMERCIAL GRADE
NOTE 3: HARDWARE PER MANUF. REQIREMENTS
NOTE 4: SAFETY GLAZING TO MEET ANSI Z97.1 CLASS A
NOTE 5: DARK BRONZE PAINT COLOR TO BE (SW 6076 "TURKISH COFFEE")
NOTE 6: EXTERIOR DOOR WHEN INDICATED ON PLAN 1/A-100

2 A-100 SCHEDULES
NTS

SET 1	1 1/2 PAIR HINGES NRP MORTISED DEADBOLT AND LOCKSET COMBINED WITH THUMB TURN INSIDE AND KEYED OUTSIDE. ONE ACTION OPERATED BOTH BOLT AND LOCKSET CLOSER FULL WEATHERSTRIP SWEEP RAIN DRIP ON FRAME OVERHEAD THRESHOLD SILENCERS FLOOR STOP
SET 2	1 1/2 PAIR HINGES LOCKSET – KEYED OUTSIDE, PUSH BUTTON INSIDE CLOSER FLOOR STOP – COOR. LOCATION W/ AC UNIT SILENCERS
SET 3	1 1/2 PAIR HINGES LOCKSET – KEYED OUTSIDE, PUSH BUTTON INSIDE CLOSER WALL STOP SILENCERS TACTILE SIGN W/ INTERNATIONAL SYMBOL: MEN/WOMEN
SET 4	1 1/2 PAIR HINGES LOCKSET – PASSAGE 1 STOP – FLOOR MTD. CLOSER SILENCERS

NOTE: ALL FIN. HARDWARE TO BE ADA COMPLIANT

TOILET ACCESSORIES SCHEDULE

MARK	LOCATION	DESCRIPTION	MOUNTING HEIGHT
1	TOILET ROOM	TOILET PAPER DISPENSER	22" A.F.F. TO OPERABLE PARTS
2	TOILET ROOM	42" GRAB BAR	36" A.F.F. TO TOP
3	TOILET ROOM	36" GRAB BAR	36" A.F.F. TO TOP
4	TOILET ROOM	18" x 30" MIRROR	40" A.F.F. TO BOTTOM OF REFLECTIVE SURFACE
5	TOILET ROOM	VERTICAL GRAB BAR	SEE 3/A100
6	TOILET ROOM	PAPER TOWEL DISPENSER	48" A.F.F. TO OPERABLE PARTS
8	TOILET ROOM	UNDER LAVATORY GUARD	LAVATORY SUPPLY & DRAIN PIPES

NOTES:
1. ALL TOILET ACCESSORIES SHALL BE LOCATED AND MOUNTED TO MEET ALL REQUIREMENTS OF THE ADA AND ALL LOCAL ACCESSIBILITY CODE REQUIREMENTS.
2. ALL TOILET ACCESSORIES SHALL BE BY BOBRICK OR EQUAL.
3. PROVIDE BLOCKING PER MANUFACTURER'S RECOMMENDATIONS.

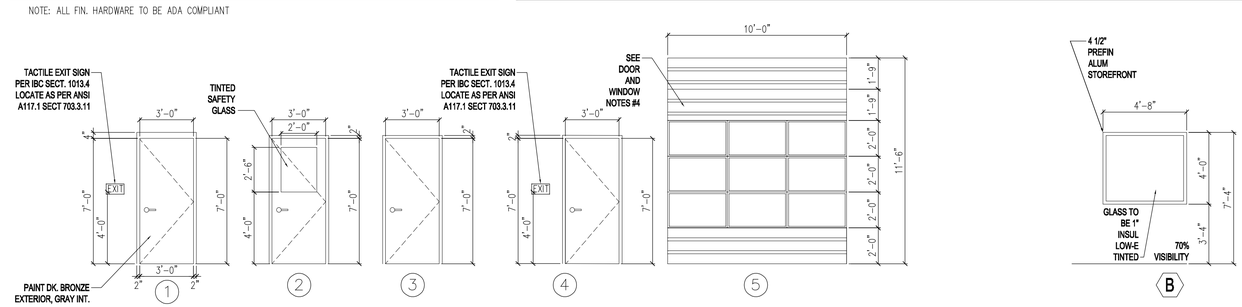

3 A-100 DOOR ELEVATIONS
1/4" = 1'-0"

4 A-100 WINDOW ELEVATIONS
1/4" = 1'-0"

TAKE 5 OIL CHANGE
3271 LANCASTER DR NE
SALEM, OR 97305

FOR: COLE VALLEY PARNERS
PORTLAND, OR

WR ARCHITECT

William Lee Robinson
Architect
1330 Betsy Dr.
Charlotte, N.C. 28211
Office: 704-370-6000
Cell: 704-953-6422
bill@childreyrobinson.com

This Drawing is the property of William Lee Robinson Architect. This Drawing is not to be copied or used for any other project or the information here upon is not to be used on any other project without the permission of William Lee Robinson Architect upon request.
Copyright 2022, William Lee Robinson Architect.

Written dimensions take precedence over scaled dimensions.

SEALS

REVISIONS

REV.	DESCRIPTION

DATE
08/20/24

SHEET NAME
PLAN AND SCHEDULES

SHEET NUMBER
A-100