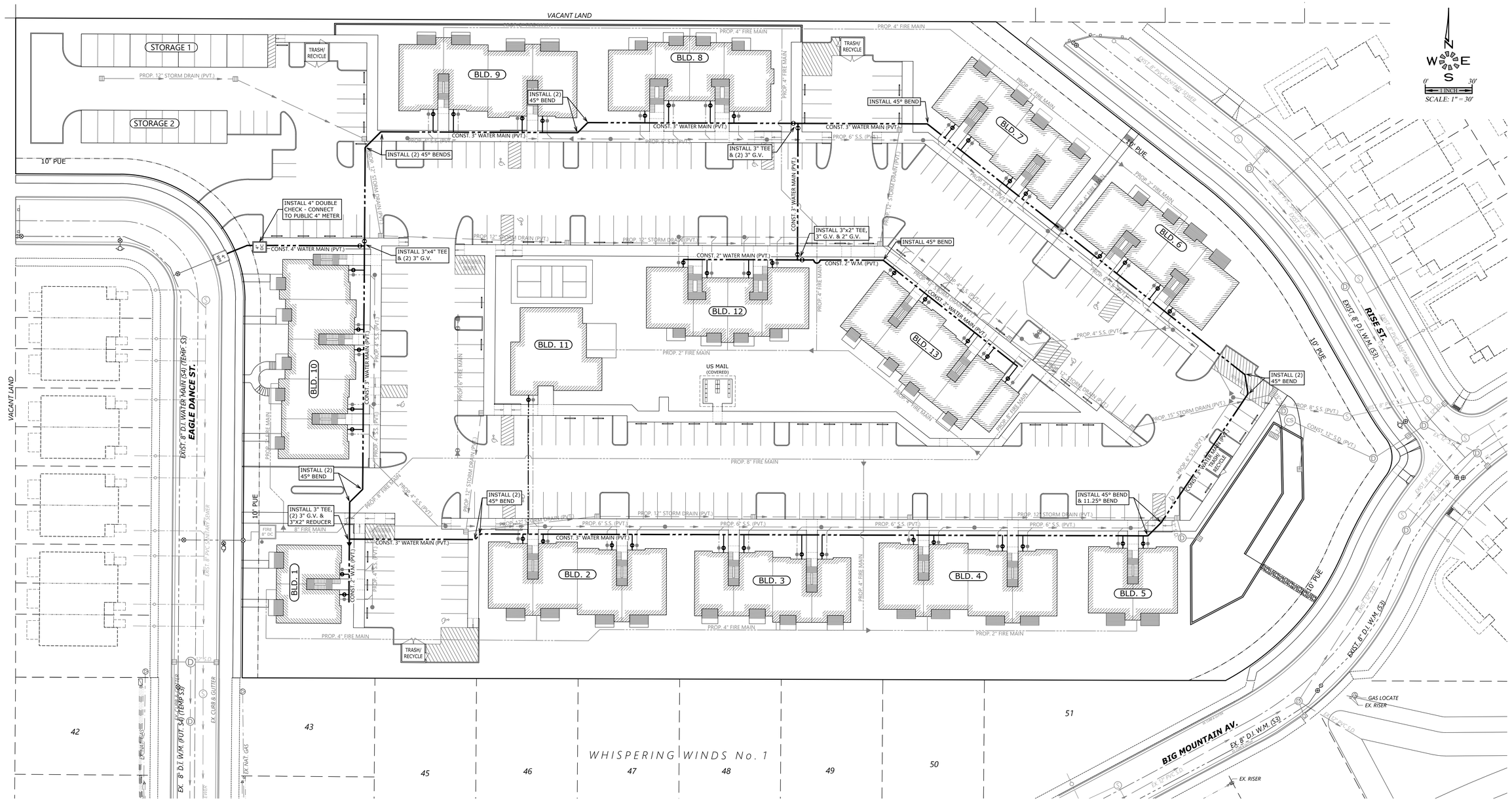

MULTI/TECH
ENGINEERING SERVICES, INC.
1155 13th ST. S.E. SALEM, OR. 97302
PH. (503) 363-9227 FAX (503) 364-1260
www.mtengineering.net office@mtengineering.net

PRIVATE DOMESTIC WATER PLAN

LIBERTY ROAD APARTMENTS WEST

NO CHANGES, MODIFICATIONS OR REPRODUCTIONS TO BE MADE TO THESE DRAWINGS WITHOUT WRITTEN AUTHORIZATION FROM THE DESIGN ENGINEER.

DIMENSIONS & NOTES TAKE PRECEDENCE OVER GRAPHICAL REPRESENTATION.

7586b SDR8BW

Design: M.D.G.
Drawn: P.H.S. & M.K.D.
Checked: M.D.G.
Date: ----
Scale: AS SHOWN

REGISTERED PROFESSIONAL ENGINEER
OREGON
JULY 14, 1995
MARK D. GRENZ

EXPIRES: 06-30-2025

JOB # 7586

SDR8

LIBERTY ROAD APARTMENTS WEST

SEC. 16, T. 8 S., R. 3 W., W.M.
CITY OF SALEM
MARION COUNTY, OREGON

Owner / Developer:

HARRISON INDUSTRIES, L.L.C.

S10355 Liberty Road S.
SALEM, OREGON 97306

N
W E
S
0' 40'
1 INCH
SCALE: 1" = 40'

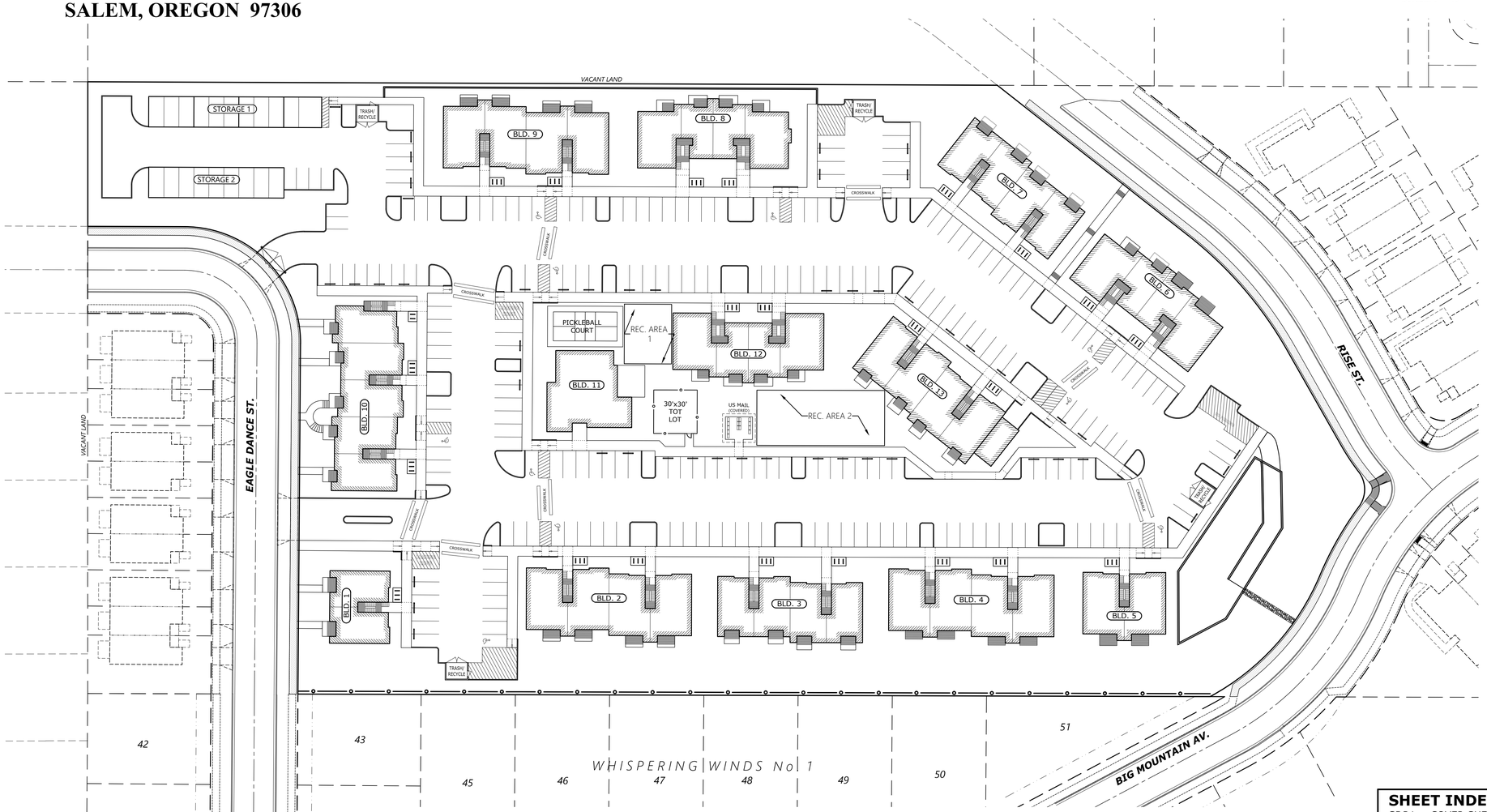

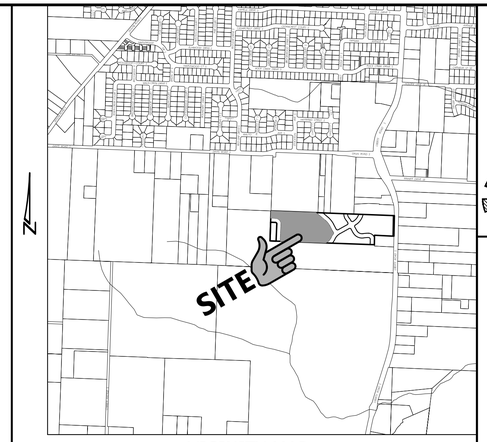

VICINITY MAP

ABBREVIATIONS

A.C.	ASPHALTIC CONCRETE	L.P.	LIGHT POLE
ACMP	ALUMINIZED CMP	M	METER, MAIN
ASSY.	ASSEMBLY	M.H.	MANHOLE
B.O.	BLOW OFF	MTL.	METAL
B.F.V.	BUTTERFLY VALVE	O.H.	OVERHEAD
C & G	CURB & GUTTER	PC	POINT OF CURVE
CATV	CABLE TELEVISION	PCC	POINT OF CONTINUING CURVE
C.B.	CATCH BASIN	PED.	PEDESTAL
C.B.C.O.	CATCH BASIN CLEANOUT	PRC	POINT OF REVERSE CURVE
C.B.I.	CATCH BASIN INLET	PROP.	PROPOSED
C.L.	CENTERLINE	PT	POINT OF TANGENCY
CMP	CORRUGATED METAL PIPE	PUB.	PUBLIC
C.O.	CLEANOUT	PUE	PUBLIC UTILITY EASMT.
CONC.	CONCRETE	PVC	POLYVINYL CHLORIDE
CONST.	CONSTRUCT	PVT.	PRIVATE
D.I.	DUCTILE IRON	P.P.	POWER POLE
DIA.	DIAMETER	P.L.	PROPERTY LINE
DWG	DRAWING	R	RADIUS
EASMT.	EASEMENT	R-	RIM
E.G.	EXIST. GRADE / GROUND	RD	ROOF DRAIN
EOP, E.P.	EDGE OF PAVEMENT	R.O.W.	RIGHT-OF-WAY
ELEC.	ELECTRIC	SAN.S. or S.S.	SANITARY SEWER
ELEV. or EL.	ELEVATION	S	SLOPE
EX. or EXIST.	EXISTING	STA.	STATION
FT.	FEET	STD.	STANDARD
F.F.	FINISH FLOOR	STL.	STEEL
F.G.	FINISH GRADE	STM.DRN. or S.D.	STORM DRAIN
F.H.	FIRE HYDRANT	SVC.	SERVICE
F.M.	FORCE MAIN	SW	SIDEWALK
GUT. or GTR.	GUTTER	T.C.	TOP OF CURB
G.V.	GATE VALVE	TEL.	TELEPHONE
IMP.	IMPROVEMENT	TYP.	TYPICAL
INST.	INSERT	U.G.	UNDERGROUND
INV. or I-	INVERT	VLT.	VAULT
L	LENGTH, LINE	W.M.	WATER MAIN

SYMBOLS

EXIST.	PROP.		EXIST.	PROP.	
		BLOW OFF ASSY.			MANHOLE SAN. SEWER
		CATCH BASIN			MANHOLE STORM DRAIN
		CATCH BASIN CLEANOUT			2' DIA. C.O. / M.H.
		CATCH BASIN INLET			MANHOLE TELEPHONE
		CATV PED. / BOX			MANHOLE WATER
		CLEANOUT			REDUCER / INCREASER
		ELEC. PED. / BOX			TEL. PED. / BOX
		FIRE HYDRANT			TRAFFIC PED. / BOX
		GAS LOCATION MARKER			UTILITY / POWER POLE
		GAS VALVE			WATER METER
		MAIL BOX			WATER VALVE

CABLE TELEVISION
CENTERLINE
DITCH C.L.
ELECTRICAL LINE
GAS MAIN
TELEPHONE LINE

SANITARY SEWER EXIST.
SANITARY SEWER PROP.
STORM DRAIN EXIST.
STORM DRAIN PROP.
WATER MAIN EXIST.
WATER MAIN PROP.

T.B.M. 626.08
EXISTING SANITARY SEWER MANHOLE RIM IN THE INTERSECTION OF EAGLE DANCE ST. S. & BIG MOUNTAIN AV. BASED ON SURVEY CONTROL 8207 - ALUMINUM DISC AT THE NE CORNER OF LIBERTY RD SE AND KUEBLER BLVD. SE, 8.3' N OF M.H., 12.2' SW OF SIGNAL POLE.
(DATUM NGVD 1929)

SHEET INDEX

SDR1	COVER SHEET
SDR2	EXISTING CONDITIONS PLAN
SDR3	SITE PLAN
SDR4	OPEN SPACE PLAN
SDR5	GRADING PLAN
SDR6	PRIVATE STORM DRAIN PLAN
SDR7	PRIVATE SANITARY SEWER PLAN
SDR8	PRIVATE DOMESTIC WATER PLAN
SDR9	PRIVATE FIRE SERVICE PLAN
L1.1	SCHEMATIC LANDSCAPE PLAN
L1.2	SCHEMATIC LANDSCAPE PLAN
L1.3	SCHEMATIC LANDSCAPE PLAN
L1.4	SCHEMATIC LANDSCAPE PLAN

MULTI/TECH
ENGINEERING SERVICES, INC.
1155 13th ST. S.E. SALEM, OR. 97302
PH. (503) 363-9227 FAX (503) 364-1260
www.mtengineering.net office@mtengineering.net

COVER SHEET

LIBERTY ROAD APARTMENTS WEST

NO CHANGES, MODIFICATIONS OR REPRODUCTIONS TO BE MADE TO THESE DRAWINGS WITHOUT WRITTEN AUTHORIZATION FROM THE DESIGN ENGINEER.

DIMENSIONS & NOTES TAKE PRECEDENCE OVER GRAPHICAL REPRESENTATION.

7586b SDR001CO

Design: M.D.G.
Drawn: P.H.S. & M.K.D.
Checked: M.D.G.
Date: ----
Scale: AS SHOWN

REGISTERED PROFESSIONAL ENGINEER
OREGON
JULY 14, 1975
MARK D. GRENZ

EXPIRES: 06-30-2025

JOB # 7586

SDR1

J:\7586\7586-LibertyRoadWestDwg\J2375586.dwg, SDR001CO, 10/14/2024 4:23:00 PM, MDGmer, MDGmer

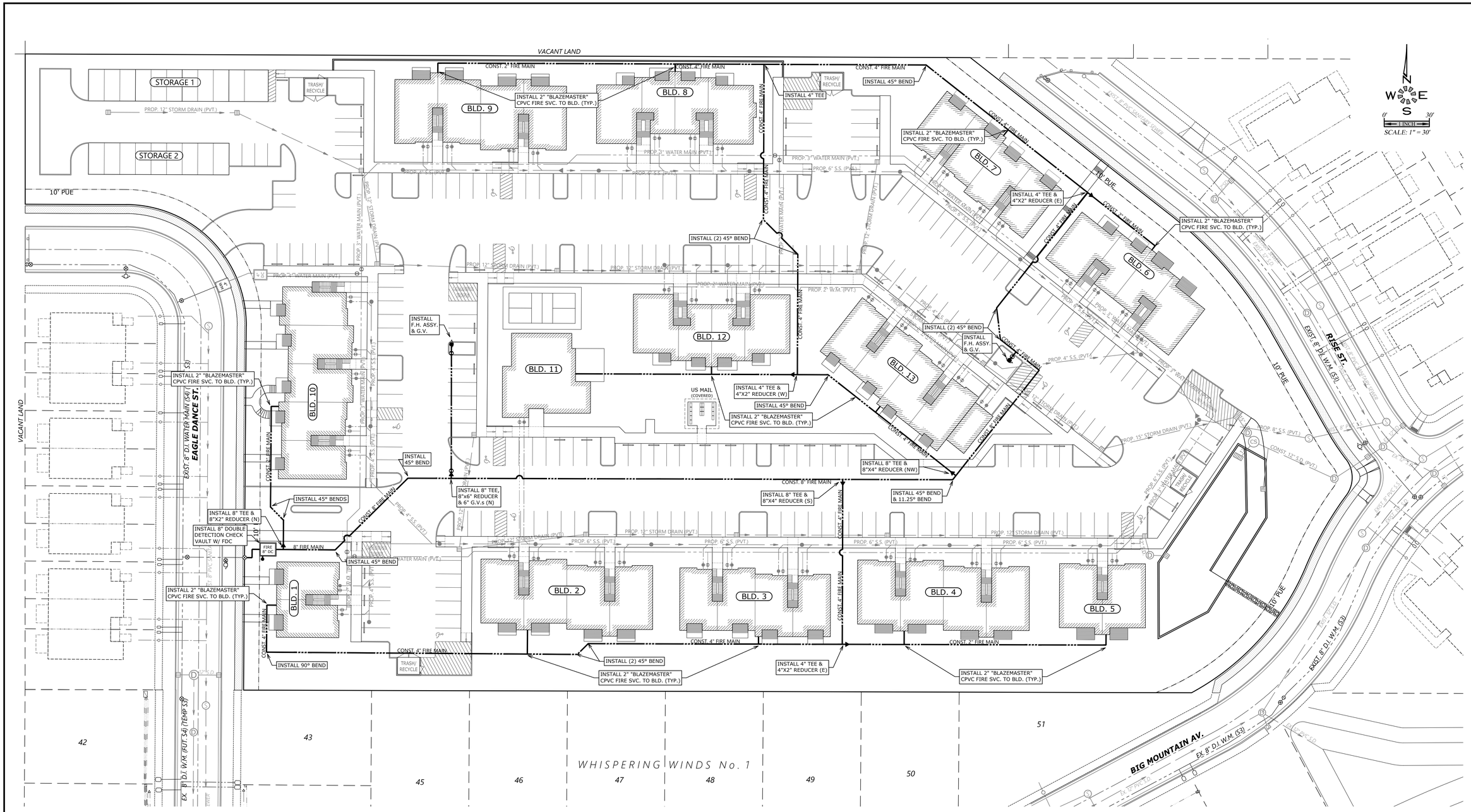

MULTI/TECH
ENGINEERING SERVICES, INC.
1155 13th ST. S.E. SALEM, OR. 97302
PH. (503) 363-9227 FAX (503) 364-1260
www.mtengineering.net office@mtengineering.net

PRIVATE FIRE SERVICE PLAN

LIBERTY ROAD APARTMENTS WEST

NO CHANGES, MODIFICATIONS OR REPRODUCTIONS TO BE MADE TO THESE DRAWINGS WITHOUT WRITTEN AUTHORIZATION FROM THE DESIGN ENGINEER.

DIMENSIONS & NOTES TAKE PRECEDENCE OVER GRAPHICAL REPRESENTATION.

7586b SDR09F

Design: M.D.G.
Drawn: P.H.S. & M.K.D.
Checked: M.D.G.
Date: ----
Scale: AS SHOWN

REGISTERED PROFESSIONAL ENGINEER
OREGON
JULY 14, 1978
MARK D. GRENZ

EXPIRES: 06-30-2025

JOB # 7586

SDR9

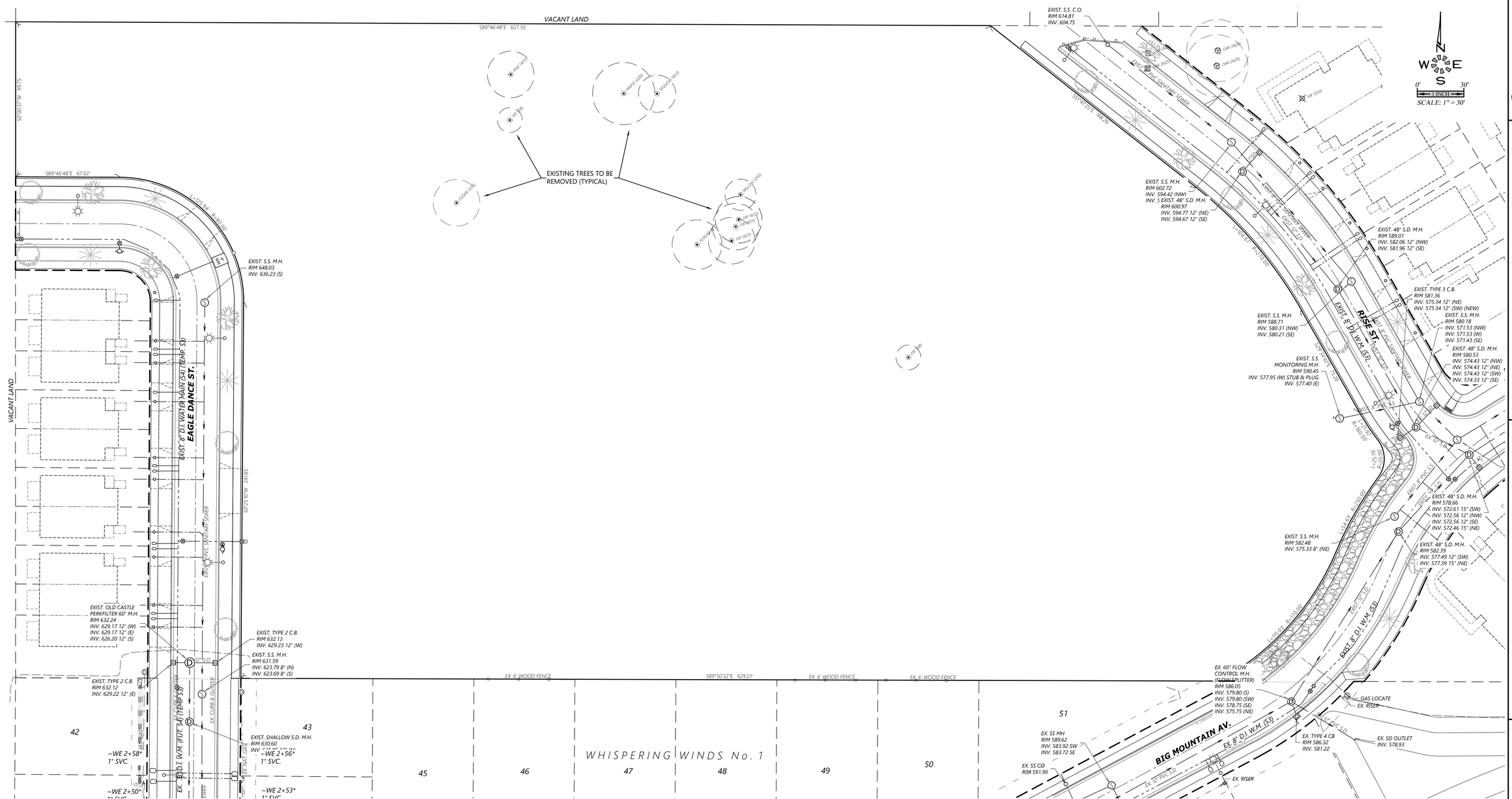

MULTI/TECH
ENGINEERING SERVICES, INC.
1155 13th ST. S.E. SALEM, OR. 97302
PH. (503) 363-9227 FAX (503) 364-1260
www.mtengineering.net office@mtengineering.net

EXISTING CONDITIONS PLAN

LIBERTY ROAD APARTMENTS WEST

NO CHANGES, MODIFICATIONS OR REPRODUCTIONS TO BE MADE TO THESE DRAWINGS WITHOUT WRITTEN AUTHORIZATION FROM THE DESIGN ENGINEER.

DIMENSIONS & NOTES TAKE PRECEDENCE OVER GRAPHICAL REPRESENTATION.

7586b SDR02XC

Design: M.D.G.
Drawn: P.H.S. & M.K.D.
Checked: M.D.G.
Date: ----
Scale: AS SHOWN

REGISTERED PROFESSIONAL ENGINEER
OREGON
JULY 14, 1978
MARK D. GROSHONG

EXPIRES: 06-30-2025

JOB # 7586

SDR2

J:\75xx\7586-LibertyRoadWestDwg\v23\7586b.dwg SDR02XC, 10/11/2024 8:26:32 AM, Gail

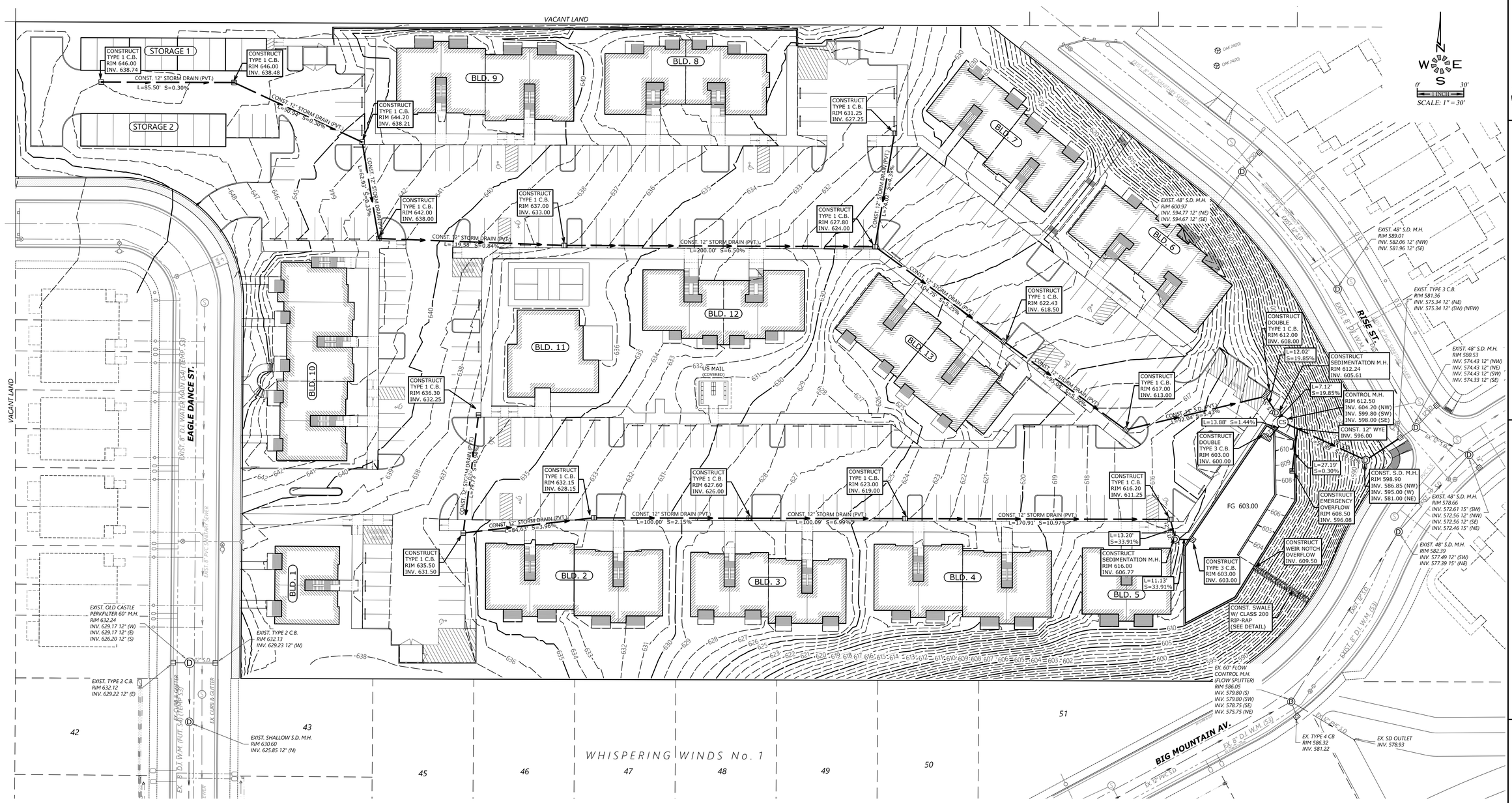

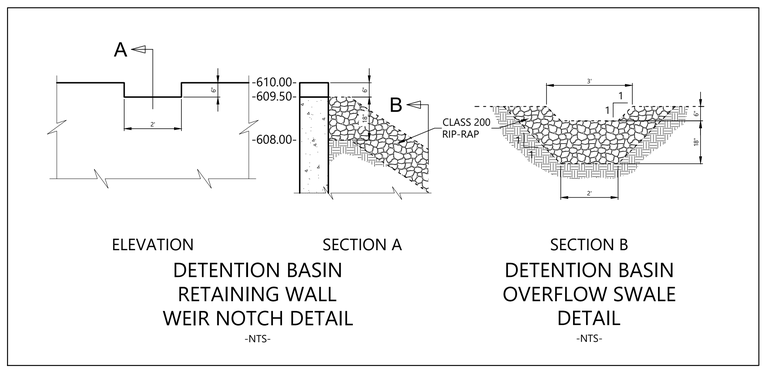

MULTI/TECH
ENGINEERING SERVICES, INC.
1155 13th ST. S.E. SALEM, OR. 97302
PH. (503) 363-9227 FAX (503) 364-1260
www.mtengineering.net office@mtengineering.net

PRIVATE STORM DRAIN PLAN

LIBERTY ROAD APARTMENTS WEST

NO CHANGES, MODIFICATIONS OR REPRODUCTIONS TO BE MADE TO THESE DRAWINGS WITHOUT WRITTEN AUTHORIZATION FROM THE DESIGN ENGINEER.

DIMENSIONS & NOTES TAKE PRECEDENCE OVER GRAPHICAL REPRESENTATION.

Design:	M.D.G.
Drawn:	P.H.S. & M.K.D.
Checked:	M.D.G.
Date:	----
Scale:	AS SHOWN

REGISTERED PROFESSIONAL ENGINEER — OREGON — JULY 14, 1978 — MARK D. GRENZ

EXPIRES: 06-30-2025

JOB # 7586

SDR6

★★ THE INDICATED LOWER FLOOR UNITS IN BUILDINGS 2,6 & 8 ARE TO BE TYPE A UNITS IN ACCORDANCE WITH THE 2022 OSSC SEC. 1107.6.2.1.1 (NOTED ON FLOOR PLANS). ALL OTHER LOWER FLOOR UNITS TO BE TYPE B UNITS IN ACCORDANCE WITH THE 2022 OSSC SEC. 1107.6.2.1.2

- Ⓟ - POLE LIGHT MAXIMUM 14' TALL
- ◎ - POST LIGHT MAXIMUM 5' TALL
- - WALL PACK MOUNTED ON BUILDING
- - LOCATION OF ELECTRICAL SEPARATION WALL
- ① - MAXIMUM 1:12 SLOPE ON SIDEWALK END RAMPS
- III - 6 BICYCLE SPACES
- II - 4 BICYCLE SPACES

135 TOTAL APARTMENT UNITS
30 TYPE "A" 2-Bd, 1-Ba 903 (S.F.) UNITS
27 TYPE "B" 2-Bd, 2-Ba 1,005 (S.F.) UNITS
42 TYPE "C" 2-Bd, 2-Ba 1,139 (S.F.) UNITS
18 TYPE "D" 3-Bd, 2-Ba 1,123 (S.F.) UNITS
18 TYPE "E" 1-Bd, 1-Ba 728 (S.F.) UNITS
7 9'x10' STORAGE UNITS
5 10'x10' STORAGE UNITS

235 TOTAL PARKING STALLS
179 STANDARD STALLS
46 COMPACT STALLS
10 HANDICAP STALLS
2 12'x20' LOADING ZONES
25 STORAGE UNITS
150 BICYCLE SPACES IN 25 RACKS
1 CLUBHOUSE / MANAGER'S OFFICE
1 PICKLEBALL COURT
1 30'x30' TOT LOT
4 TRASH / RECYCLE
1 PLAY AREA
1 U.S. MAIL BOX AREA
EVC - ELECTRIC VEHICLE PARKING:
94 TOTAL PARKING STALLS (40%)
60 STANDARD STALLS
32 COMPACT STALLS
2 HANDICAP STALLS

ADA HANDICAP ACCESSIBLILITY NOTES:

1. ALL ON-SITE WALKWAYS, PEDESTRIAN CONNECTIONS TO THE PUBLIC SIDEWALK AND ROUTES TO BUILDING ENTRANCES ARE ACCESSIBLE WITH RUNNING SLOPES LESS THAN 5% AND CROSS SLOPE LESS THAN 2% MAX. LANDINGS AT BOTTOM OF STAIRS AND EXT. FACE OF ENTRANCE DOORS SHALL HAVE A SLOPE IN THE DIRECTION OF TRAVEL NOT TO EXCEED 2%.
2. HANDICAP PARKING STALLS AND ACCESS AISLES ARE TO HAVE SLOPES IN ANY DIRECTION OF LESS THAN 2% MAX. GRAPHIC MARKINGS & SIGNAGE FOR HANDICAP AND VAN ACCESSIBLE STALLS WILL BE PER OSSC 2010 CHPTR. 11 AND ORS. REQUIREMENTS.
3. HANDICAP ACCESSIBLE CURB RAMPS SHALL HAVE A RUNNING SLOPE NOT TO EXCEED 1:12 MAX. AND A CROSS SLOPE NOT TO EXCEED 1%.
4. THE COMMUNITY BUILDING & ON-SITE LAUNDRY FACILITIES WILL BE FULLY HANDICAP ACCESSIBLE IN ACCORDANCE WITH ANSI A117.1 AND CHAPTER 11 OF THE 2010 OSSC.
5. 2% OF THE LIVING UNITS OR (3) UNITS WILL BE TYPE 'A' HANDICAP ACCESSIBLE. THESE INCLUDE A 1, 2 AND 3 BEDROOM UNIT AS INDICATED ON THIS SITE PLAN. THE BALANCE OF THE GROUND FLOOR LIVING UNITS WILL BE TYPE 'B' ADAPTABLE UNITS IN ACCORDANCE WITH ANSI A117.1.

MULTI/TECH
ENGINEERING SERVICES, INC.
1155 13th ST. S.E. SALEM, OR. 97302
PH. (503) 363-9227 FAX (503) 364-1260
www.mtengineering.net office@mtengineering.net

SITE PLAN ALTERNATE #1

LIBERTY ROAD APARTMENTS WEST

NO CHANGES, MODIFICATIONS OR REPRODUCTIONS TO BE MADE TO THESE DRAWINGS WITHOUT WRITTEN AUTHORIZATION FROM THE DESIGN ENGINEER.

DIMENSIONS & NOTES TAKE PRECEDENCE OVER GRAPHICAL REPRESENTATION.

7586b SDR03S1

Design: M.D.G.
Drawn: P.H.S. & M.K.D.
Checked: M.D.G.
Date: ----
Scale: AS SHOWN

REGISTERED PROFESSIONAL ENGINEER
OREGON
JULY 9, 1974
MARK D. GRENZ

EXPIRES: 06-30-2025

JOB # 7586

SDR3

COMMON OPEN SPACE

COMMON OPEN SPACE WITHIN SETBACK AREA

SITE AREAS

BOUNDARY	**291,276 S.F.**	
TOTAL SITE	**291,276 S.F.**	
R.O.W. DEDICATION	**0 S.F.**	
NET DEVELOPABLE	**291,276 S.F.**	
SITE AREA	**291,276 S.F.**	**(100%)**
COMMON OPEN SPACE (TOTAL)	**141,023 S.F.**	**(48%)**
COMMON OPEN SPACE WITHIN SETBACKS	**31,959 S.F.**	
PRIVATE SPACE (GROUND FLOOR PATIOS)	**4,011 S.F.**	
LANDSCAPE (TOTAL)	**105,895 S.F.**	**(36%)**
PARKING LOT LANDSCAPING	**6,049 S.F.**	
BUILDING FOOTPRINT	**49,683 S.F.**	**(17%)**
REC. BUILDING	**2,646 S.F.**	
REC. AREA 1	**1,341 S.F.**	
REC. AREA 2	**3,354 S.F.**	

MULTI/TECH
ENGINEERING SERVICES, INC.
1155 13th ST. S.E. SALEM, OR. 97302
PH. (503) 363-9227 FAX (503) 364-1260
www.mtengineering.net office@mtengineering.net

OPEN SPACE PLAN

LIBERTY ROAD APARTMENTS WEST

NO CHANGES, MODIFICATIONS OR REPRODUCTIONS TO BE MADE TO THESE DRAWINGS WITHOUT WRITTEN AUTHORIZATION FROM THE DESIGN ENGINEER.

DIMENSIONS & NOTES TAKE PRECEDENCE OVER GRAPHICAL REPRESENTATION.

75860 SDR04/05

Design: M.D.G.
Drawn: P.H.S. & M.K.D.
Checked: M.D.G.
Date:
Scale: AS SHOWN

REGISTERED PROFESSIONAL ENGINEER
OREGON
JULY 14, 1976
MARK D. GRENZ

EXPIRES: 06-30-2025

JOB # 7586

SDR4

J:\7586\7586-LibertyRoadWest\Dwg v23\7586.dwg, SDR04/05, 10/15/2024 9:06:23 AM, MDGrenz, MDGrenz

MULTI/TECH
ENGINEERING SERVICES, INC.
1155 13th ST. S.E. SALEM, OR. 97302
PH. (503) 363-9227 FAX (503) 364-1260
www.mtengineering.net office@mtengineering.net

GRADING PLAN

LIBERTY ROAD APARTMENTS WEST

NO CHANGES, MODIFICATIONS OR REPRODUCTIONS TO BE MADE TO THESE DRAWINGS WITHOUT WRITTEN AUTHORIZATION FROM THE DESIGN ENGINEER.

DIMENSIONS & NOTES TAKE PRECEDENCE OVER GRAPHICAL REPRESENTATION.

7586 SDR05G

Design: M.D.G.
Drawn: P.H.S. & M.K.D.
Checked: M.D.G.
Date: ----
Scale: AS SHOWN

REGISTERED PROFESSIONAL ENGINEER
OREGON
JULY 11, 1978
MARK D. GRENZ

EXPIRES: 06-30-2025

JOB # 7586

SDR5

MULTI/TECH
ENGINEERING SERVICES, INC.
1155 13th ST. S.E. SALEM, OR. 97302
PH. (503) 363-9227 FAX (503) 364-1260
www.mtengineering.net office@mtengineering.net

PRIVATE SANITARY SEWER PLAN

LIBERTY ROAD APARTMENTS WEST

NO CHANGES, MODIFICATIONS OR REPRODUCTIONS TO BE MADE TO THESE DRAWINGS WITHOUT WRITTEN AUTHORIZATION FROM THE DESIGN ENGINEER.

DIMENSIONS & NOTES TAKE PRECEDENCE OVER GRAPHICAL REPRESENTATION.

7586b SDR07SS

Design: M.D.G.
Drawn: P.H.S. & M.K.D.
Checked: M.D.G.
Date: ----
Scale: AS SHOWN

REGISTERED PROFESSIONAL ENGINEER
OREGON
JULY 14, 1995
MARK D. GROVE

EXPIRES: 06-30-2025

JOB # 7586

SDR7

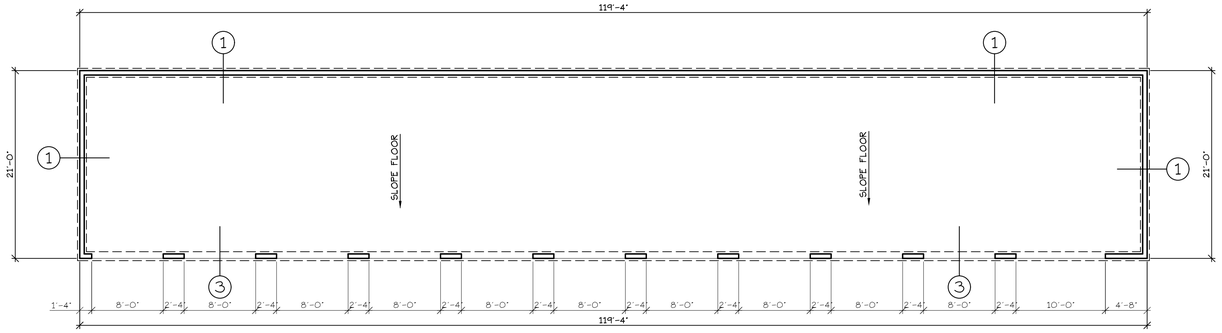

FOUNDATION PLAN
SCALE: 1/8" = 1'-0"

STORAGE 1 (11 STORAGE)

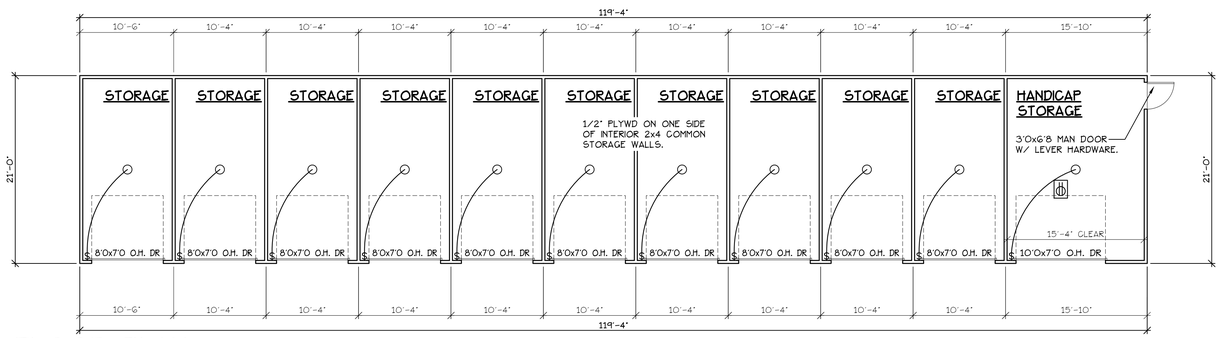

FLOOR PLAN
SCALE: 1/8" = 1'-0"

STORAGE 1 (11 STORAGE)

NOTE: ALL WALLS TO BE FRAMED WITH 2x4 STUDS. UNLESS NOTED OTHERWISE.

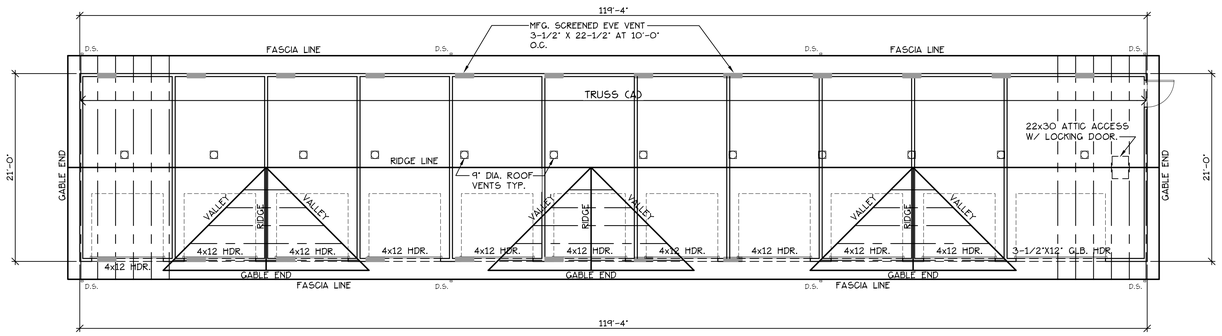

ROOF + TRUSS PLAN
SCALE: 1/8" = 1'-0"

STORAGE 1 (11 STORAGE)

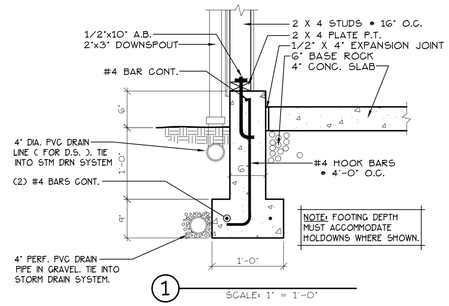

1 SCALE: 1" = 1'-0"

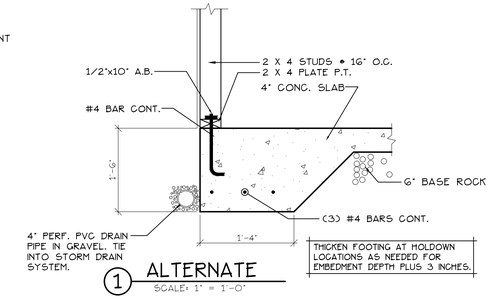

ALTERNATE
1 SCALE: 1" = 1'-0"

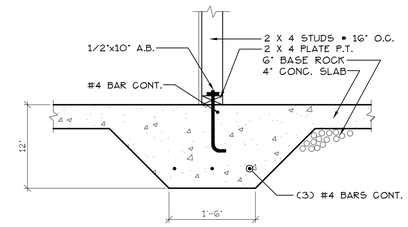

2 SCALE: 1" = 1'-0"

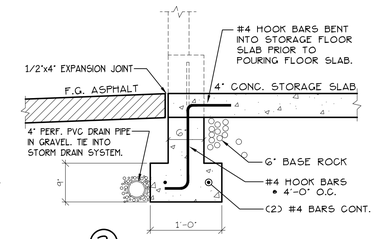

3 SCALE: 1" = 1'-0"

NORTH ELEVATION (STORAGE 1 (11 STORAGE))
SCALE: 1/8" = 1'-0"

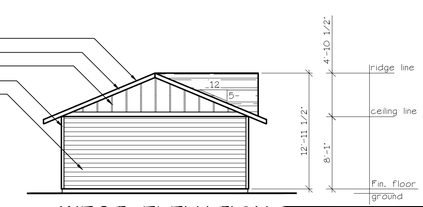

WEST ELEVATION (STORAGE 1 (11 STORAGE))
SCALE: 1/8" = 1'-0"

SOUTH ELEVATION (STORAGE 1 (11 STORAGE))
SCALE: 1/8" = 1'-0"

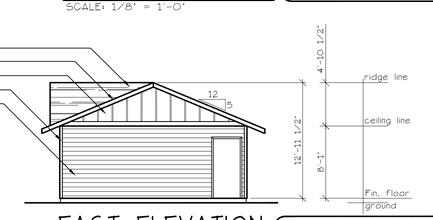

EAST ELEVATION (STORAGE 1 (11 STORAGE))
SCALE: 1/8" = 1'-0"

MULTI/TECH
CONSULTANTS
ENGINEERING SERVICES, INC.
1155 SW STARK ST., SUITE 250, PORTLAND, OR 97205
PHONE: (503) 363-9227 • FAX: (503) 364-1260
www.multitech.we office@multitech.we

FOUNDATION, FLOLOR AND ROOF PLANS

LIBERTY ROAD APARTMENTS WEST

NO CHANGES, MODIFICATIONS OR REPRODUCTIONS TO BE MADE TO THESE DRAWINGS WITHOUT WRITTEN AUTHORIZATION FROM THE DESIGN ENGINEER.

DIMENSIONS & NOTES TAKE PRECEDENCE OVER GRAPHICAL REPRESENTATION.

GARY=TMC/PLOT1
1/8=1/1.4/0.70

Design: P.L.M.
Drawn: G.I.D.
Checked: M.D.G.
Date: Oct-24
Scale: AS SHOWN

JOB # 7586

REGISTERED PROFESSIONAL ENGINEER
OREGON
JULY 14, 1978
MARK D. GRENZ

Renew date June 30, 2025

A14.1

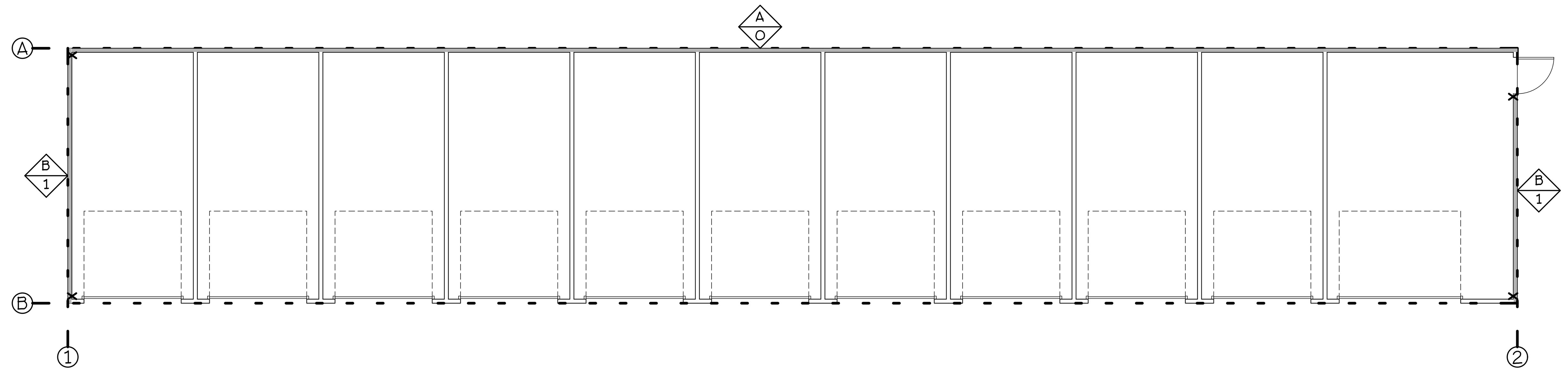

LOWER FLOOR PLAN

SCALE: 1/8" = 1'-0"

STORAGE 1 (11 STORAGE)

DESIGN LOADS:

A. Roof Dead Load = 17 psf
Roof Live load = 20 psf
B. Floor Dead Load = 20 psf
Floor Live load = 40 psf
C. Stair Dead Load = 50 psf
Stair Live load = 100 psf
D. Flat roof snow Load = 12.6 p.s.f.
E. Minimum snow Load = 25 p.s.f.
F. Exposure factor = C_e = 0.9
G. Thermal factor = C_t = 1.0
H. Importance factor = I_s = 1.0
J. Slope factor = C_s = 1.0

WIND:

Basic Wind Speed V = 120 mph
Design Wind Speed V_{asd} = 93 mph
Importance Factor I = 1.0
Wind Exposure = B
Internal Pressure Coefficient G = +/- 0.18

SEISMIC:

Risk Category = II
Seismic Importance Factor I_s = 1.0
S_s = .796
S_1 = 0.398
S_{Ds} = 0.793
S_{D1} = 0.493
Seismic Design Catagory=D
Seismic Force Resisting System-Bearing wall system w/ structural wood panels.
Response Modification Coeficient R=6.5.
Design Base Shear=0.7*C_s*W.
Seismic Response Coefficient C_s =0.116.
Analysis Procedure-Equivalent Lateral Force Procedure.

GENERAL STRUCTURAL NOTES:

CODE:

A. All materials and workmanship shall conform to the requirements of the State of Oregon 2022 Structural Specialty Code.

GENERAL:

A. Contractor shall be responsible for all construction methods, techniques, sequencing and safety required to complete construction.

B. Contractor shall verify all dimensions and details prior to proceeding with construction. All discrepancies shall be approved by the Architect of Engineer of record.

C. Contractor shall verify all required openings on Architectural, Mechanical and Electrical plans.

FOUNDATION:

A. Footings have been designed for a maximum allowable soil bearing pressure of 1500 psf. (Geotech Report).

B. All footings shall be poured against undisturbed soil unless otherwise noted. (See Geotech report for soil condition and requirements).

CONCRETE:

A. All structural concrete shall develop a unit compressive stress of 2500 psi minimum at 28 days per O.S.S.C. section 1904.1.

REINFORCED STEEL:

A. All reinforcing steel shall be ASTM A615, Grade 60 rail steel deformed bars conforming to ASTM A706, Grade 60 bars where welding is required.

B. Details of reinforcing steel shall conform to ASTM Manual of Standard Practice, Code of Standard Practice for Detailing Reinforcing Materials, by CRSI and WCRSI (latest Edition).

C. All concrete slab reinforcing steel shall be supported at the required heights by approved bolsters prior to pouring slab concrete.

REINFORCING PROTECTION:

A. Concrete deposited against earth = 3 inches
B. Concrete formed surfaces exposed to ground or weather: #5 rebar and smaller - 1-1/2 inches.
C. Slabs = 3/4 inches.

STRUCTURAL WOOD:

A. All structural wood members shall conform to the National Design Specifications for Stress Grade lumber and its fastenings.
Post and Beam 1st floor framing - Douglas Fir No. 2 or better.
Floor Joists and Headers - Douglas Fir No. 2 Unless noted otherwise.
Stud walls - Douglas Fir stud U.N.O.
(Use of Hem-fir of Mix shall be acceptable only with approval from the engineer)
B. The Contractor shall furnish and install all bolts, and plates as required to complete the job.
C. Washers shall be used under all bolt heads and nuts bearing on wood.
D. All wood members in contact with concrete or masonry shall be pressure treated.

HOLDOWN SCHEDULE[1,2,3,4]

HOLDOWN TYPE	HOLDOWN	ANCHOR BOLT	ANCHOR DIAMETER	EMBED LENGTH	MIN. STEM-WALL WIDTH	WOOD MEMBER	CONNECTION TO WOOD MEMBER	REMARKS	ALLOWABLE LOAD
0	No Holdown								
1	HDU2	SSTB24	5/8"	20 5/8"	6"	(2) 2x6[6]	(6) 1/4"x2-1/2"[7]	———	3,075#
2	HDU4	SB5/8x24	5/8"	18"	6"	(2) 2x6[6]	(10) 1/4"x2-1/2"[7]	———	4,565#
3	HDU5	SB5/8x24	5/8"	18"	6"	(2) 2x6[6]	(14) 1/4"x2-1/2"[7]	———	5,645#
4	HDU8	SB7/8x24	7/8"	18"	8"	4x6	(20) 1/4"x2-1/2"[7]	———	7,870#
5	HDQ8	PAB7-30	7/8"	26 3/4"	8"	4x6	(20) 1/4" x 3"[7]	———	9,230#
6	HD12	PAB8-30	1"	26 3/4"	8"	6x6	(4) 1" DIA. M.B.	———	14,220#
7	HDU14	PAB8-30	1"	26 3/4"	8"	(1) 6x6	(36) 1/4"x2-1/2"[7]	———	14,445#
8	MSTC28	N/A	N/A	N/A	N/A	(2) 2x6[6]	(16) - 16d Sinker	———	1,540#
9	MSTC40	N/A	N/A	N/A	N/A	(2) 2x6[6]	(32) - 16d Sinker	———	3,080#
10	MSTC52	N/A	N/A	N/A	N/A	(2) 2x6[6]	(48) - 16d Sinker	———	4,620#
11	MSTC66	N/A	N/A	N/A	N/A	(2) 2x6[6]	(64) - 16d Sinker	———	5,860#

Notes:
1. Holdowns by Simpson strong-Tie Company, Inc. See Simpson catalog for proper installation.
2. Hardmount all holdown anchors prior to concrete pour.
3. Edge nail sheathing to all posts or boundary members at holdowns.
4. Locate Holdown within 6" of end of Shear Panel.
5. All wood members must be "Douglas fir".
6. Laminate studs with 16d Nails at 12" on center staggered. Clinch tips of nails.
7. Use Simpson SDS 1/4" dia. wood screws.
8. 2 Holdowns required (see "Holdowns between floors" detail this sheet).
9. Use threaded rod + CNW coupler to attach to anchor bolt at foundation. Run threaded rod up to Holdown at lower floor and connect.

C / 5 — Shearwall Type / Holdown Type

SHEAR WALL SCHEDULE

WALL TYPE	STRUCTURAL PANEL SHEATHING	PANEL EDGE NAILING	FIELD NAILING	A 35 CLIP DOUBLE TOP PLATE CONN.[5]	SILL PLATE CONNECTION (A.B.)[16] 1/2" DIA. x 10" LONG	SILL PLATE CONNECTION (A.B.)[16] 5/8" DIA. x 10" LONG	SOLE PLATE CONNECTION[5]	SHEAR VALUE (PLF) DOUGLAS FIR WIND	SHEAR VALUE (PLF) DOUGLAS FIR SEISMIC
A	7/16" OSB or 15/32" Plywood	0.131" Dia. x 2.5" Nails at 6" o.c.	0.131" Dia. x 2.5" Nails at 12" o.c.	20" O.C.	3'-8" O.C.[10]	4'-0" O.C.[10]	16d Nails at 6" o.c.	365	260
B	7/16" OSB or 15/32" Plywood	0.131" Dia. x 2.5" Nails at 4" o.c.	0.131" Dia. x 2.5" Nails at 12" o.c.	15" O.C.	2'-9" O.C.[10]	4'-0" O.C.[10]	16d Nails at 4-1/2" o.c.	530	380
C	7/16" OSB or[11] 15/32" Plywood	0.131" Dia. x 2.5" Nails at 3" o.c.	0.131" Dia. x 2.5" Nails at 12" o.c.	11" O.C.	N/A	2'-9" O.C.[10]	16d Nails at 3-1/2" o.c.	685	490
D	15/32" Plywood[11]	0.148" Dia. x 3" Nails at 3" o.c.	0.148" Dia. x 3" Nails at 12" o.c.	9" O.C.	N/A	2'-4" O.C.[10]	(2) Rows 16d Nails at 6" o.c.	840	600
E	15/32" Plywood[11]	0.148" Dia. x 3" Nails at 2" o.c.	0.148" Dia. x 3" Nails at 12" o.c.	7" O.C.	N/A	1'-9" O.C.[12]	N/A	1,075	770
F	1/2" GWB MIN.	5d cooler nails at 4" o.c.	5d cooler nails at 12" o.c.	24" O.C.	4'-0" O.C.	4'-0" O.C.	16d Nails at 6" o.c.	125	125
G	1/2" GWB MIN.	#6x1-1/4" screws 4" o.c. (blocked)	#6x1-1/4" screws 12" o.c.	24" O.C.	4'-0" O.C.	4'-0" O.C.	16d Nails at 6" o.c.	160	160

Notes:
1. Block all edges of sheathing.
2. Do not break sheathing skin by over driving nails.
3. Pre-drill as required to avoid splitting sills, etc.
4. Nails should be located 3/8" clear of panel edges.
5. Use Simpson A35 clips to attach blocking to top plate at floor line. At roof line use Simpson H-1 clips at each truss (U.O.N.).
6. Values of other standard construction fasteners will require spacing adjustments and must be approved by the engineer-of-record.
7. Use hot dipped galvanized nails at all exterior applications.
8. C-D, C-C sheathing, plywood panels siding, and other grades covered in APA Plywood Design Specification.
9. Sheathing face grain can be applied perpendicular or parallel to wall studs, provided studs are spaced a maximum of 16" o.c.
10. 3"x3"x1/4" washer required on A.B. with 2x sill plates.
11. Framing at adjoining panel edges shall be (3) 2x studs laminated (see detail this sheet).
12. Min. 3" nominal sill plate w/ 3"x3"x1/4" washers.
13. Sheath entire wall (above + below) windows and doors) according to shearwall schedule. Use of 3"x3"x1/4" washers are required on all anchor bolts for these walls.
14. Install LTP5 when required at 32" o.c. per detail.
15. All wood members must be "Douglas Fir".
16. All walls not designated as shearwalls to have 1/2"x10" anchor bolts at 4'-0" o.c. maximum.
17. Interior shearwall to extend to roof sheathing via truss or blocking panels.

C / 5 — Shearwall Type / Holdown Type

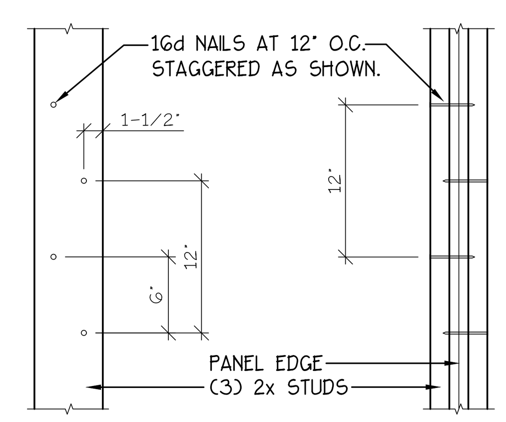

THIS DETAIL IS SHOWN TO CLARIFY NOTE #11 OF SHEAR WALL SCHEDULE.

(3) 2x STUDS LAMINATED

N.T.S.

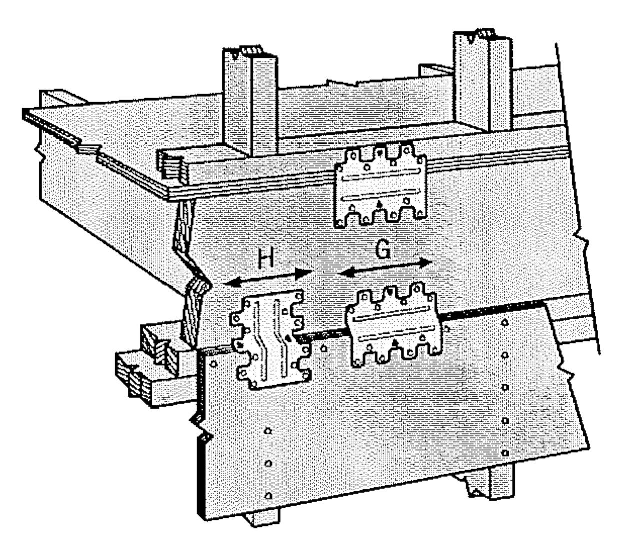

LTP5 INSTALLATION

N.T.S.

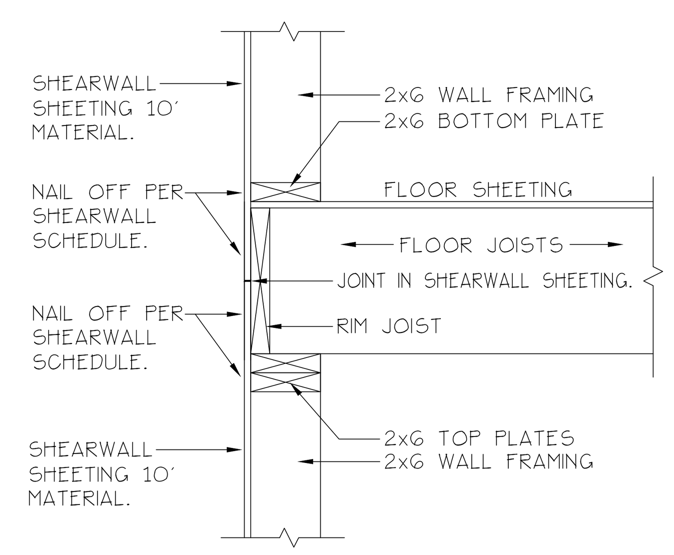

ALTERNATE WALL NALING TO ELIMINATE LTP-5 (note 14)

N.T.S.

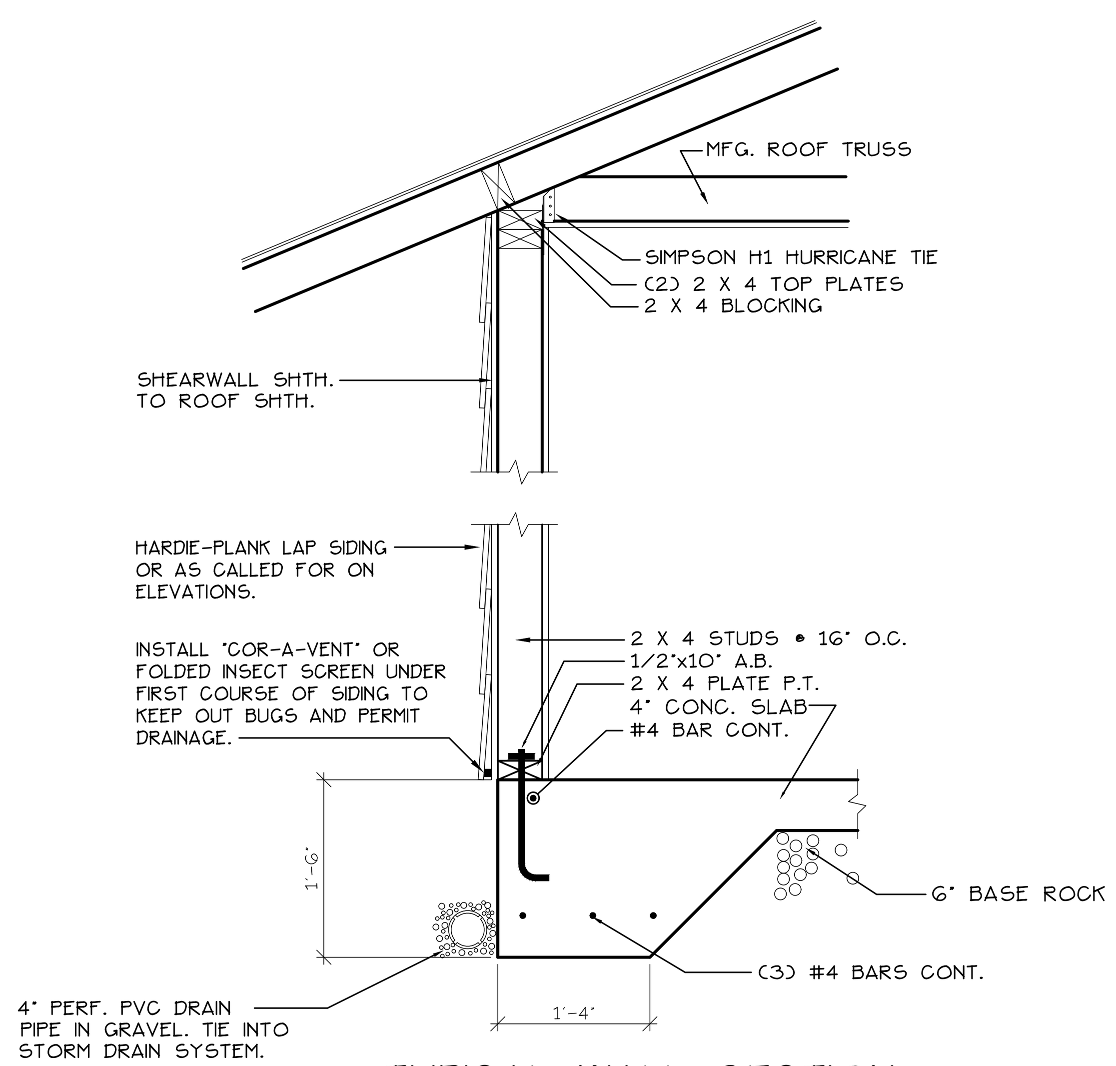

TYPICAL WALL SECTION

SCALE: 1" = 1'-0"

MULTI/TECH CONSULTANTS
ENGINEERING SERVICES, INC.
1155 13th ST. S.E. SALEM, OR. 97302
PHONE: (503) 363 - 9227 * FAX: (503) 364-1260
www.multitech.ws office@multitech.ws

SHEARWALL AND HOLDOWN PLAN

LIBERTY ROAD APARTMENTS WEST

NO CHANGES, MODIFICATIONS OR REPRODUCTIONS TO BE MADE TO THESE DRAWINGS WITHOUT WRITTEN AUTHORIZATION FROM THE DESIGN ENGINEER.

DIMENSIONS & NOTES TAKE PRECEDENCE OVER GRAPHICAL REPRESENTATION.

GAR1-7HC/PLOT:1 TAB=A14.2SHR

Design: P.L.M.
Drawn: G.I.D.
Checked: M.D.G.
Date: Oct-24
Scale: AS SHOWN

JOB # 7586

REGISTERED PROFESSIONAL ENGINEER 9954 OREGON JULY 14, 1978 MARK D. GRENZ

Renew date June 30, 2025

A14.2

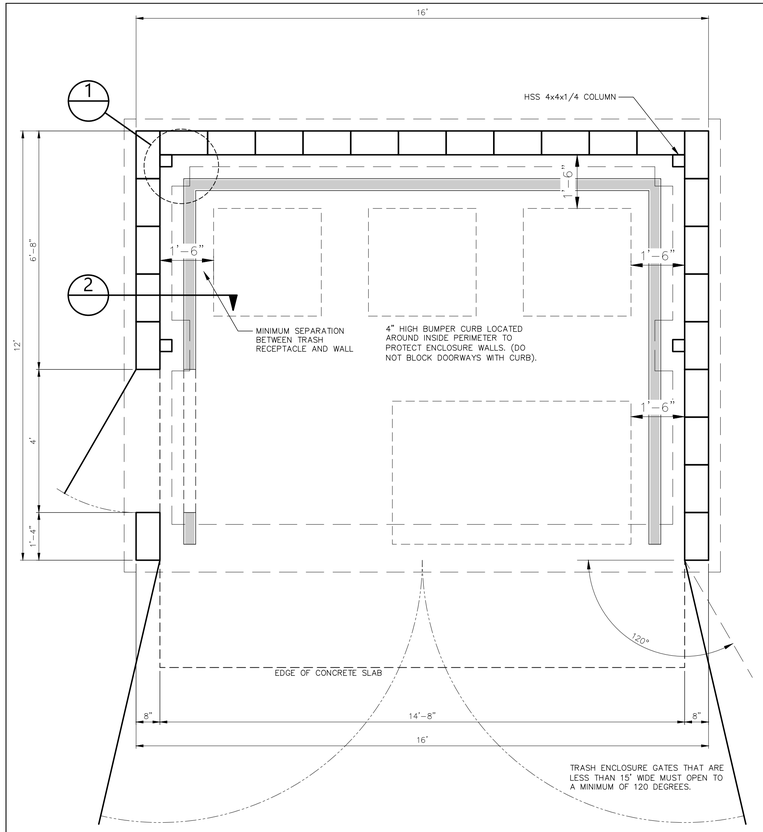

TRASH ENCLOSURE PLAN (OPTION #1)

SCALE: 1/2" = 1'-0"

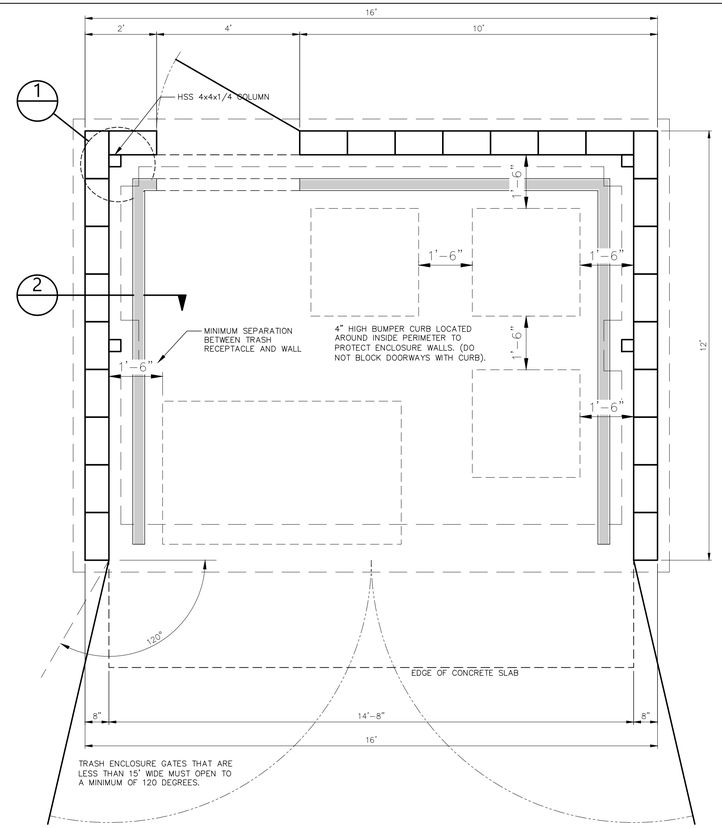

TRASH ENCLOSURE PLAN (OPTION #2)

SCALE: 1/2" = 1'-0"

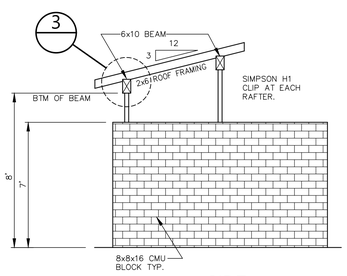

SIDE

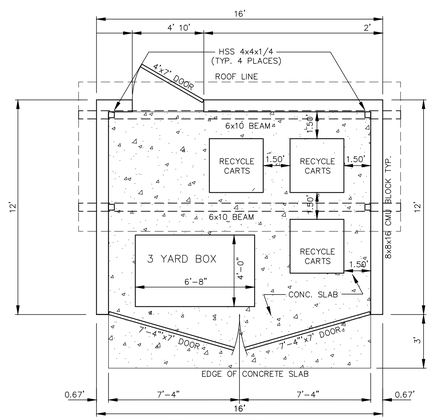

PLAN VIEW

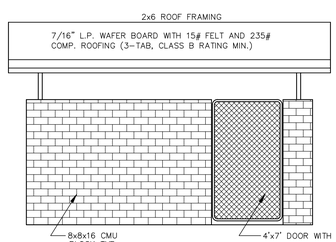

REAR

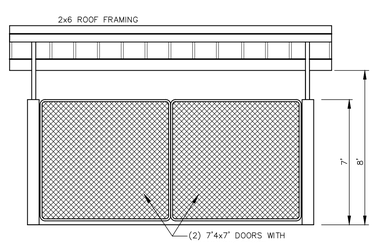

FRONT

TRASH & RECYCLE ENCLOSURE

-NTS-

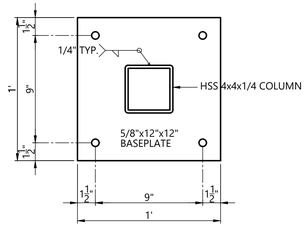

BASE PLATE DETAIL

SCALE: 2" = 1'-0"

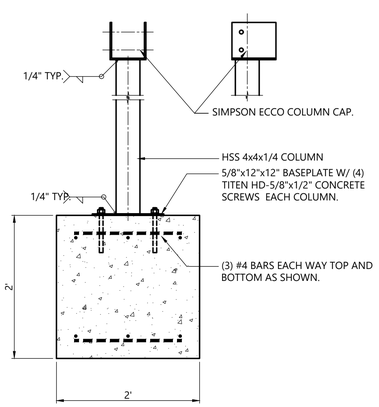

1 FOOTING & COLUMN DETAIL

SCALE: 1' = 1'-0"

TRASH ENCLOSURE

CONTRACTOR TO COORDINATE WITH FENCE COMPANY TO INSTALL RESTRAINERS AT EACH GATE FOR BOTH THE OPEN AND CLOSD POSITIONS.

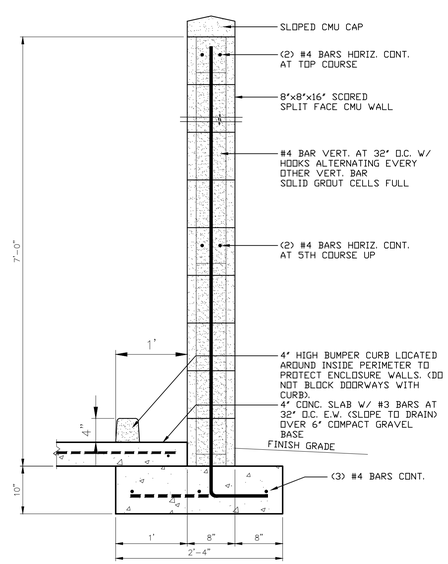

2 FOOTING & CMU WALL DETAIL

SCALE: 1' = 1'-0"

TRASH ENCLOSURE

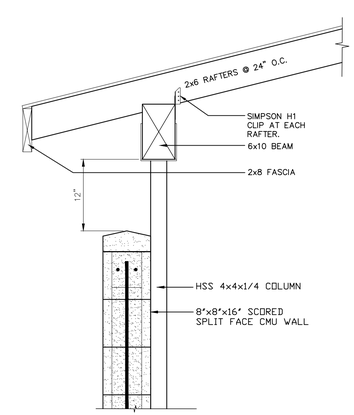

3 RAFTER TO BEAM CONNECTION

SCALE: 1' = 1'-0"

MULTI/TECH CONSULTANTS
ENGINEERING SERVICES, INC.
1155 13TH ST. SE SALEM, OR 97302
PHONE (503) 363-9227 FAX (503) 364-1260
www.multitech.us office@multitech.us

TRASH ENCLOSURE PLAN

LIBERTY ROAD APARTMENTS

NO CHANGES, MODIFICATIONS OR REPRODUCTIONS TO BE MADE TO THESE DRAWINGS WITHOUT WRITTEN AUTHORIZATION FROM THE DESIGN ENGINEER.

DIMENSIONS & NOTES TAKE PREFERENCE OVER GRAPHICAL REPRESENTATION.

TRASH/PLOT1
TAB=OT.4-TRASH

Design: P.L.M.
Drawn: G.I.D./A.R.B.
Checked: M.D.G.
Date: Jun-22
Scale: AS SHOWN

JOB # 6727

REGISTERED PROFESSIONAL ENGINEER
OREGON
JULY 14, 1978
MARK D. GRENZ
Renew date June 30, 2023

A9.1

J:\Tech\7366-Liberty Road\Plans\Plan\Dwg-v2\TRASH.dwg A9.1-TRASH, 10/15/2024 10:08:34 AM, ABaldwin

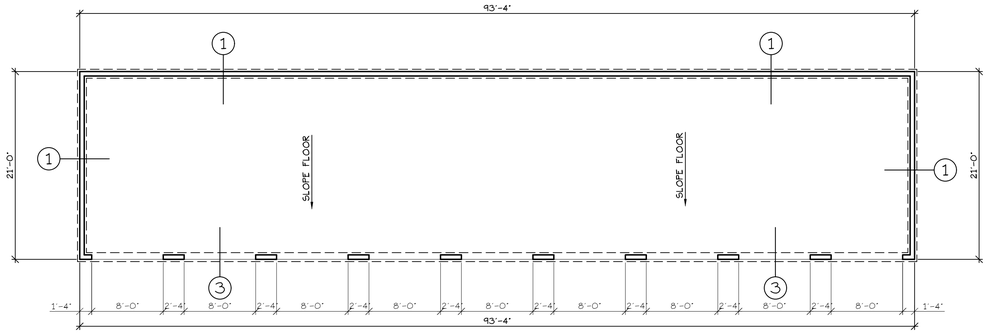

FOUNDATION PLAN
SCALE: 1/8" = 1'-0"

STORAGE 2 (9 STORAGE)

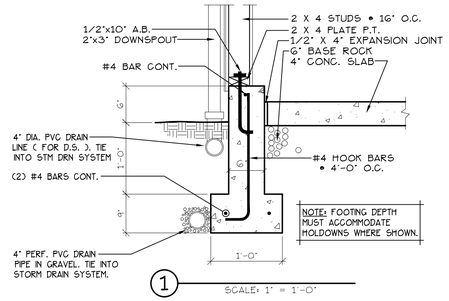

1 SCALE: 1" = 1'-0"

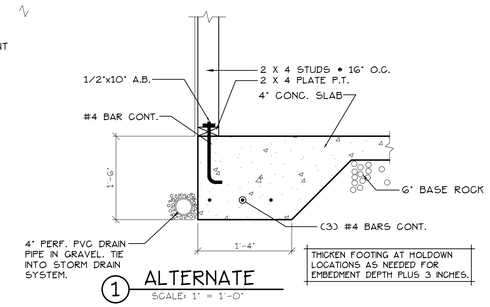

1 ALTERNATE
SCALE: 1" = 1'-0"

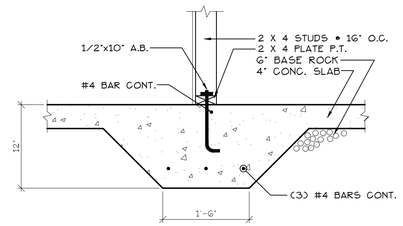

2 SCALE: 1" = 1'-0"

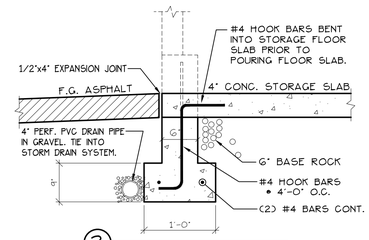

3 SCALE: 1" = 1'-0"

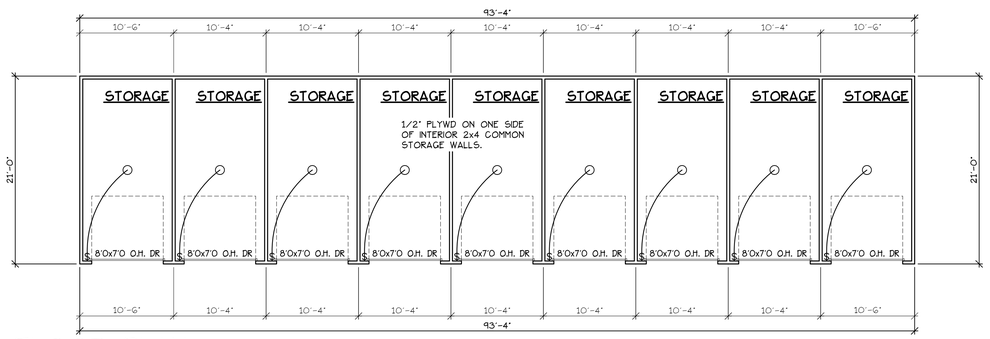

FLOOR PLAN
SCALE: 1/8" = 1'-0"

STORAGE 2 (9 STORAGE)

NOTE: ALL WALLS TO BE FRAMED WITH 2x4 STUDS. UNLESS NOTED OTHERWISE.

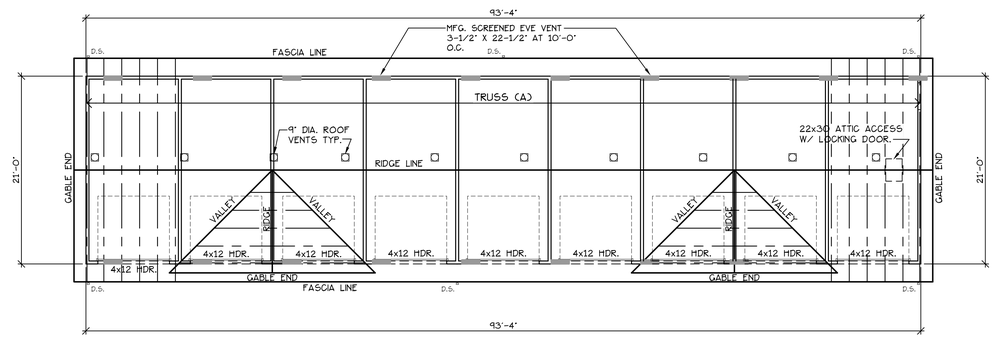

ROOF + TRUSS PLAN
SCALE: 1/8" = 1'-0"

STORAGE 2 (9 STORAGE)

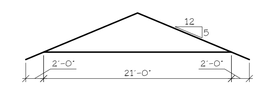

TRUSS (A)
@ 2'-0" O.C.

SOUTH ELEVATION (STORAGE 2 (9 STORAGE))
SCALE: 1/8" = 1'-0"

EAST ELEVATION (STORAGE 2 (9 STORAGE))
SCALE: 1/8" = 1'-0"

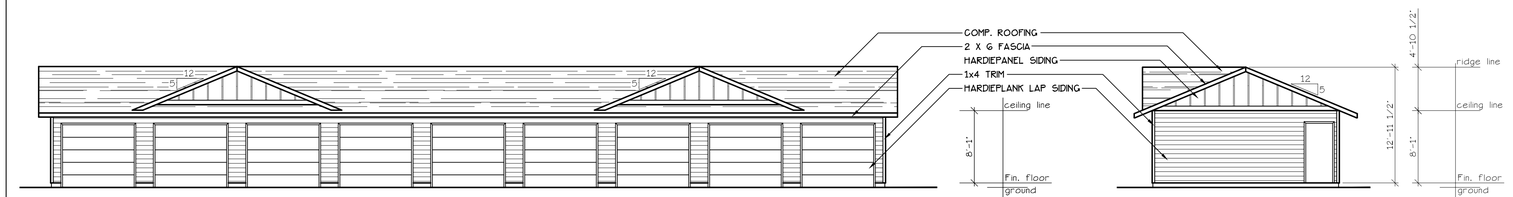

NORTH ELEVATION (STORAGE 2 (9 STORAGE))
SCALE: 1/8" = 1'-0"

WEST ELEVATION (STORAGE 2 (9 STORAGE))
SCALE: 1/8" = 1'-0"

MULTI/TECH
CONSULTANTS
ENGINEERING SERVICES, INC.
1155 NW NORTH ST. • P.O. BOX 292 • STAYTON, OR 97383
PHONE: (503) 363-9227 • FAX: (503) 364-1260
www.multitech.we office@multitech.we

FOUNDATION, FLOLOR AND ROOF PLANS

LIBERTY ROAD APARTMENTS WEST

NO CHANGES, MODIFICATIONS OR REPRODUCTIONS TO BE MADE TO THESE DRAWINGS WITHOUT WRITTEN AUTHORIZATION FROM THE DESIGN ENGINEER.

DIMENSIONS & NOTES TAKE PRECEDENCE OVER GRAPHICAL REPRESENTATION.

GARY=TMC/PLOT1
USER=GLD/DWG

Design: P.L.M.
Drawn: G.L.D.
Checked: M.D.G.
Date: Oct-24
Scale: AS SHOWN

JOB # 7586

REGISTERED PROFESSIONAL ENGINEER
OREGON
JULY 14, 1978
MARK D. GRENZ

Renew date June 30, 2025

A15.1

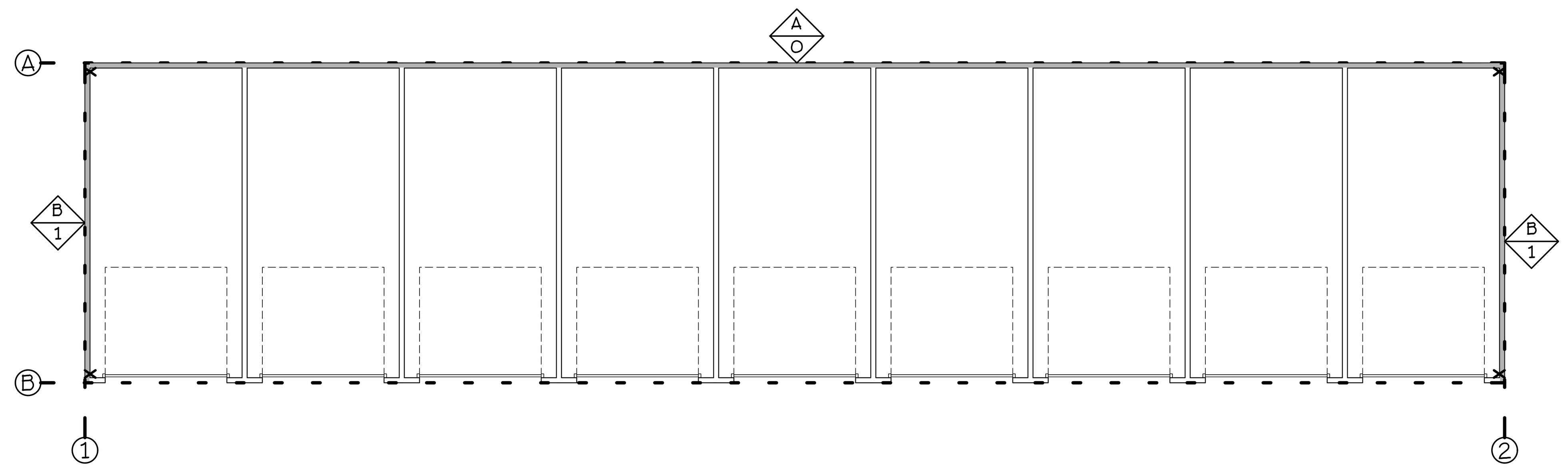

LOWER FLOOR PLAN

SCALE: 1/8" = 1'-0"

STORAGE 2 (9 STORAGE)

DESIGN LOADS:

A. Roof Dead Load = 17 psf
Roof Live load = 20 psf
B. Floor Dead Load = 20 psf
Floor Live load = 40 psf
C. Stair Dead Load = 50 psf
Stair Live load = 100 psf
D. Flat roof snow Load = 12.6 p.s.f.
E. Minimum snow Load = 25 p.s.f.
F. Exposure factor = C_e = 0.9
G. Thermal factor = C_t = 1.0
H. Importance factor = I_s = 1.0
J. Slope factor = C_s = 1.0

WIND:

Basic Wind Speed V = 120 mph
Design Wind Speed V_{asd} = 93 mph
Importance Factor I = 1.0
Wind Exposure = B
Internal Pressure Coefficient G = +/- 0.18

SEISMIC:

Risk Category = II
Seismic Importance Factor I_s = 1.0
S_s = .796
S_1 = 0.398
S_{DS} = 0.793
S_{D1} = 0.493
Seismic Design Catagory=D
Seismic Force Resisting System-Bearing wall system w/ structural wood panels.
Response Modification Coeficient R=6.5.
Design Base Shear=0.7*C_s*W.
Seismic Response Coefficient C_s =0.116.
Analysis Procedure-Equivalent Lateral Force Procedure.

GENERAL STRUCTURAL NOTES:

CODE:

A. All materials and workmanship shall conform to the requirements of the State of Oregon 2022 Structural Specialty Code.

GENERAL:

A. Contractor shall be responsible for all construction methods, techniques, sequencing and safety required to complete construction.

B. Contractor shall verify all dimensions and details prior to proceeding with construction. All discrepancies shall be approved by the Architect of Engineer of record.

C. Contractor shall verify all required openings on Architectural, Mechanical and Electrical plans.

FOUNDATION:

A. Footings have been designed for a maximum allowable soil bearing pressure of 1500 psf. (Geotech Report).

B. All footings shall be poured against undisturbed soil unless otherwise noted. (See Geotech report for soil condition and requirements).

CONCRETE:

A. All structural concrete shall develop a unit compressive stress of 2500 psi minimum at 28 days per O.S.S.C. section 1904.1.

REINFORCED STEEL:

A. All reinforcing steel shall be ASTM A615, Grade 60 rail steel deformed bars conforming to ASTM A706, Grade 60 bars where welding is required.

B. Details of reinforcing steel shall conform to ASTM Manual of Standard Practice, Code of Standard Practice for Detailing Reinforcing Materials, by CRSI and WCRSI (latest Edition).

C. All concrete slab reinforcing steel shall be supported at the required heights by approved bolsters prior to pouring slab concrete.

REINFORCING PROTECTION:

A. Concrete deposited against earth = 3 inches
B. Concrete formed surfaces exposed to ground or weather: #5 rebar and smaller - 1-1/2 inches.
C. Slabs = 3/4 inches.

STRUCTURAL WOOD:

A. All structural wood members shall conform to the National Design Specifications for Stress Grade lumber and its fastenings.
Post and Beam 1st floor framing - Douglas Fir No. 2 or better.
Floor Joists and Headers - Douglas Fir No. 2 Unless noted otherwise.
Stud walls - Douglas Fir stud U.N.O.
(Use of Hem-fir of Mix shall be acceptable only with approval from the engineer)
B. The Contractor shall furnish and install all bolts, and plates as required to complete the job.
C. Washers shall be used under all bolt heads and nuts bearing on wood.
D. All wood members in contact with concrete or masonry shall be pressure treated.

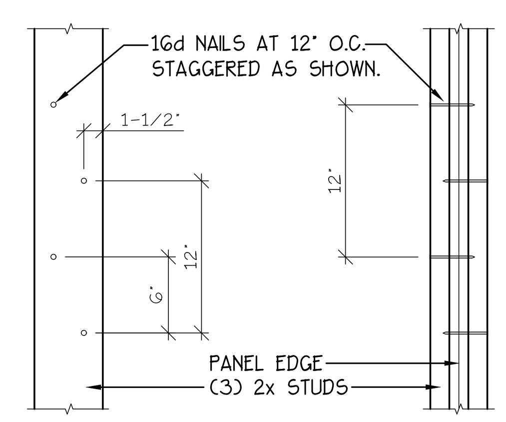

THIS DETAIL IS SHOWN TO CLARIFY NOTE #11 OF SHEAR WALL SCHEDULE.

(3) 2x STUDS LAMINATED

N.T.S.

HOLDOWN SCHEDULE[1,2,3,4]

HOLDOWN TYPE	HOLDOWN	ANCHOR BOLT	ANCHOR DIAMETER	EMBED LENGTH	MIN. STEM-WALL WIDTH	WOOD MEMBER	CONNECTION TO WOOD MEMBER	REMARKS	ALLOWABLE LOAD
0	No Holdown								
1	HDU2	SSTB24	5/8"	20 5/8"	6"	(2) 2x6[6]	(6) 1/4"x2-1/2"[7]	—	3,075#
2	HDU4	SB5/8x24	5/8"	18"	6"	(2) 2x6[6]	(10) 1/4"x2-1/2"[7]	—	4,565#
3	HDU5	SB5/8x24	5/8"	18"	6"	(2) 2x6[6]	(14) 1/4"x2-1/2"[7]	—	5,645#
4	HDU8	SB7/8x24	7/8"	18"	8"	4x6	(20) 1/4"x2-1/2"[7]	—	7,870#
5	HDQ8	PAB7-30	7/8"	26 3/4"	8"	4x6	(20) 1/4" x 3"[7]	—	9,230#
6	HD12	PAB8-30	1"	26 3/4"	8"	6x6	(4) 1" DIA. M.B.	—	14,220#
7	HDU14	PAB8-30	1"	26 3/4"	8"	(1) 6x6	(36) 1/4"x2-1/2"[7]	—	14,445#
8	MSTC28	N/A	N/A	N/A	N/A	(2) 2x6[6]	(16) - 16d Sinker	—	1,540#
9	MSTC40	N/A	N/A	N/A	N/A	(2) 2x6[6]	(32) - 16d Sinker	—	3,080#
10	MSTC52	N/A	N/A	N/A	N/A	(2) 2x6[6]	(48) - 16d Sinker	—	4,620#
11	MSTC66	N/A	N/A	N/A	N/A	(2) 2x6[6]	(64) - 16d Sinker	—	5,860#

Notes:
1. Holdowns by Simpson strong-Tie Company, Inc. See Simpson catalog for proper installation.
2. Hardmount all holdown anchors prior to concrete pour.
3. Edge nail sheathing to all posts or boundary members at holdowns.
4. Locate Holdown within 6" of end of Shear Panel.
5. All wood members must be "Douglas fir".
6. Laminate studs with 16d Nails at 12" on center staggered. Clinch tips of nails.
7. Use Simpson SDS 1/4" dia. wood screws.
8. 2 Holdowns required (see "Holdowns between floors" detail this sheet).
9. Use threaded rod + CNW coupler to attach to anchor bolt at foundation. Run threaded rod up to Holdown at lower floor and connect.

C/5 — Shearwall Type / Holdown Type

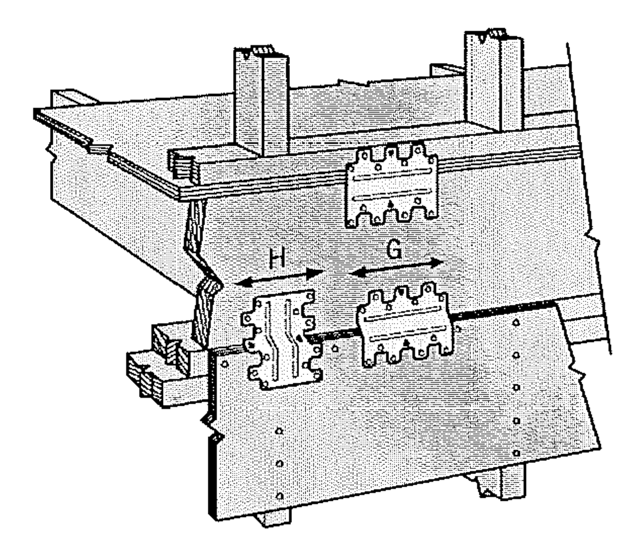

LTP5 INSTALLATION

N.T.S.

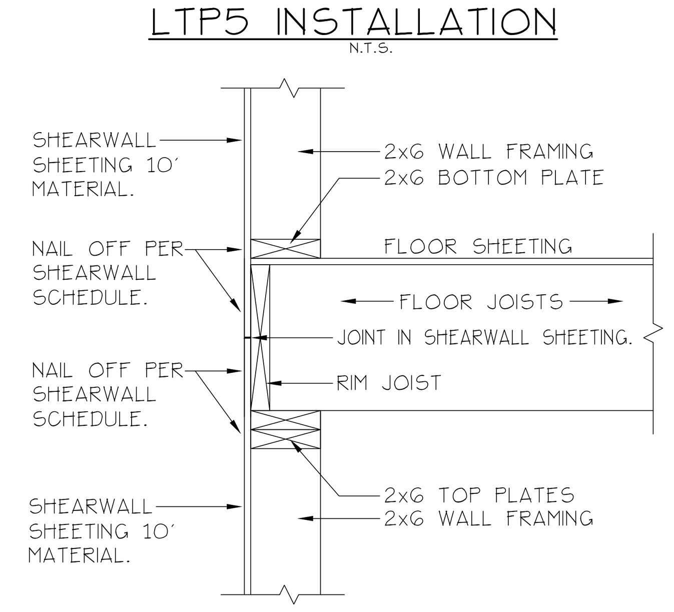

ALTERNATE WALL NALING TO ELIMINATE LTP-5 (note 14)

N.T.S.

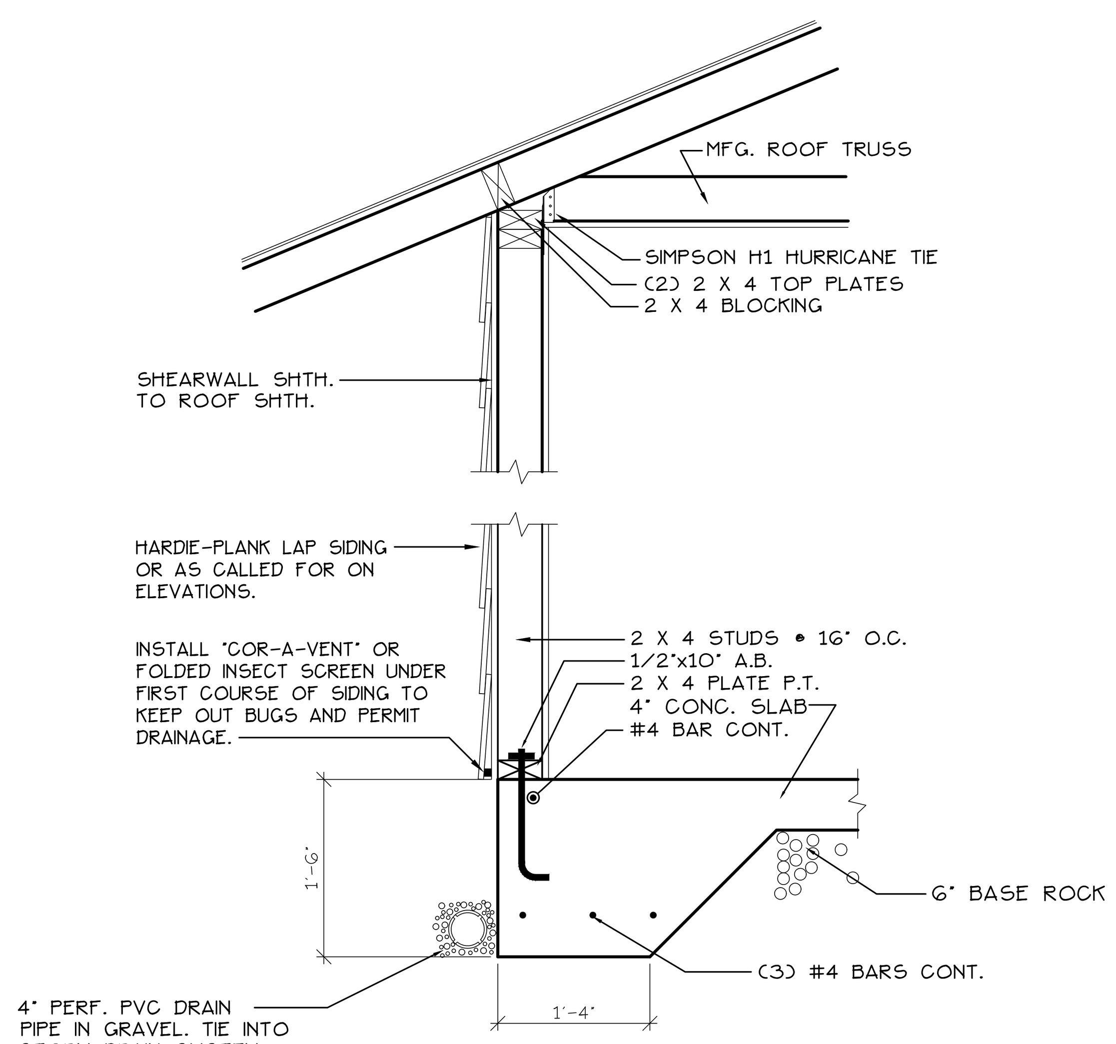

TYPICAL WALL SECTION

SCALE: 1" = 1'-0"

SHEAR WALL SCHEDULE

WALL TYPE	STRUCTURAL PANEL SHEATHING	PANEL EDGE NAILING	FIELD NAILING	A 35 CLIP DOUBLE TOP PLATE CONN.[5]	SILL PLATE CONNECTION (A.B.)[16]		SOLE PLATE[5] CONNECTION	SHEAR VALUE (PLF) DOUGLAS FIR	
					1/2" DIA. x 10" LONG	5/8" DIA. x 10" LONG		WIND	SEISMIC
A	7/16" OSB or 15/32" Plywood	0.131" Dia. x 2.5" Nails at 6" o.c.	0.131" Dia. x 2.5" Nails at 12" o.c.	20" O.C.	3'-8" O.C.[10]	4'-0" O.C.[10]	16d Nails at 6" o.c.	365	260
B	7/16" OSB or 15/32" Plywood	0.131" Dia. x 2.5" Nails at 4" o.c.	0.131" Dia. x 2.5" Nails at 12" o.c.	15" O.C.	2'-9" O.C.[10]	4'-0" O.C.[10]	16d Nails at 4-1/2" o.c.	530	380
C	7/16" OSB or[11] 15/32" Plywood	0.131" Dia. x 2.5" Nails at 3" o.c.	0.131" Dia. x 2.5" Nails at 12" o.c.	11" O.C.	N/A	2'-9" O.C.[10]	16d Nails at 3-1/2" o.c.	685	490
D	15/32" Plywood[11]	0.148" Dia. x 3" Nails at 3" o.c.	0.148" Dia. x 3" Nails at 12" o.c.	9" O.C.	N/A	2'-4" O.C.[10]	(2) Rows 16d Nails at 6" o.c.	840	600
E	15/32" Plywood[11]	0.148" Dia. x 3" Nails at 2" o.c.	0.148" Dia. x 3" Nails at 12" o.c.	7" O.C.	N/A	1'-9" O.C.[12]	N/A	1,075	770
F	1/2" GWB MIN.	5d cooler nails at 4" o.c.	5d cooler nails at 12" o.c.	24" O.C.	4'-0" O.C.	4'-0" O.C.	16d Nails at 6" o.c.	125	125
G	1/2" GWB MIN.	#6x1-1/4" screws 4" o.c. (blocked)	#6x1-1/4" screws 12" o.c.	24" O.C.	4'-0" O.C.	4'-0" O.C.	16d Nails at 6" o.c.	160	160

Notes:
1. Block all edges of sheathing.
2. Do not break sheathing skin by over driving nails.
3. Pre-drill as required to avoid splitting sills, etc.
4. Nails should be located 3/8" clear of panel edges.
5. Use Simpson A35 clips to attach blocking to top plate at floor line. At roof line use Simpson H-1 clips at each truss (U.O.N.).
6. Values of other standard construction fasteners will require spacing adjustments and must be approved by the engineer-of-record.
7. Use hot dipped galvanized nails at all exterior applications.
8. C-D, C-C sheathing, plywood panels siding, and other grades covered in APA Plywood Design Specification.
9. Sheathing face grain can be applied perpendicular or parallel to wall studs, provided studs are spaced a maximum of 16" o.c.
10. 3"x3"x1/4" washer required on A.B. with 2x sill plates.
11. Framing at adjoining panel edges shall be (3) 2x studs laminated (see detail this sheet).
12. Min. 3" nominal sill plate w/ 3"x3"x1/4" washers.
13. Sheath entire wall (above + below) windows and doors) according to shearwall schedule. Use of 3"x3"x1/4" washers are required on all anchor bolts for these walls.
14. Install LTP5 when required at 32" o.c. per detail.
15. All wood members must be "Douglas FIr".
16. All walls not designated as shearwalls to have 1/2"x10" anchor bolts at 4'-0" o.c. maximum.
17. Interior shearwall to extend to roof sheathing via truss or blocking panels.

C/5 — Shearwall Type / Holdown Type

MULTI/TECH
CONSULTANTS
ENGINEERING SERVICES, INC.
1155 13th ST. S.E. SALEM, OR. 97302
PHONE: (503) 363 - 9227 * FAX: (503) 364-1260
www.multitech.ws office@multitech.ws

SHEARWALL AND HOLDOWN PLAN

LIBERTY ROAD APARTMENTS WEST

NO CHANGES, MODIFICATIONS OR REPRODUCTIONS TO BE MADE TO THESE DRAWINGS WITHOUT WRITTEN AUTHORIZATION FROM THE DESIGN ENGINEER.

DIMENSIONS & NOTES TAKE PRECEDENCE OVER GRAPHICAL REPRESENTATION.

GAR1-7HC/PLOT:1
TAB=A15.2SHR

Design: P.L.M.
Drawn: G.I.D.
Checked: M.D.G.
Date: Oct-24
Scale: AS SHOWN

JOB # 7586

REGISTERED PROFESSIONAL ENGINEER 9954 OREGON JULY 14, 1978 MARK D. GRENZ

Renew date June 30, 2025

A15.2